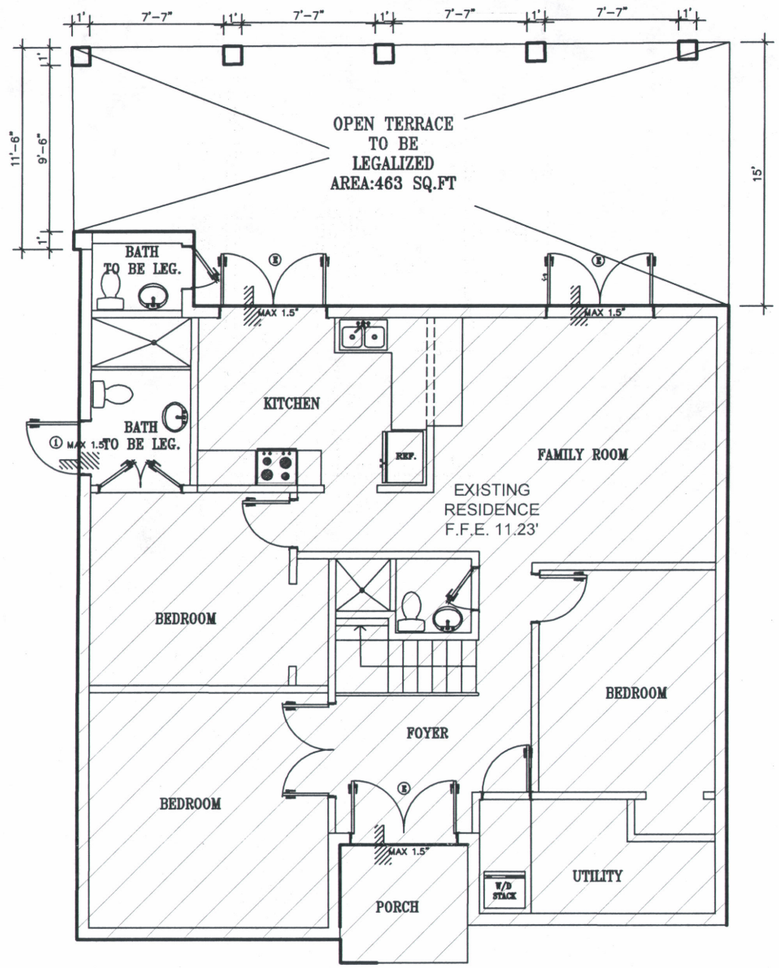

FLOOR PLAN

SCALE: 1/4" = 1'-0"

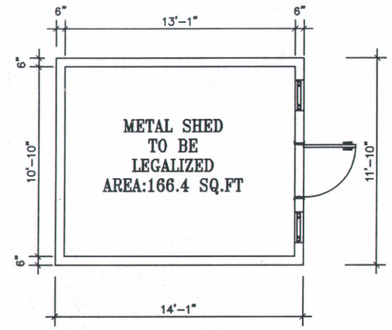

FLOOR PLAN (METAL SHED)

SCALE: 1/4" = 1'-0"

WALL LEGEND
EXISTING 8" CBS. WALL
EXISTING 4" WD. PART. WALL

RECEIVED
ZB 074
JUL 22 2015
MIAMI-DADE COUNTY
DEPARTMENT OF REGULATORY AND
ECONOMIC RESOURCES
DEVELOPMENT SERVICES
DAH

JUL 27 2015
MIAMI-DADE COUNTY
DEPARTMENT OF REGULATORY AND ECONOMIC RESOURCES
DEVELOPMENT SERVICES

PROPERTIES SOLUTION SERVICE, LLC.
11865 SW 26 Street.
Building I, Suite J-7
Miami, Florida 33175
PH: 305-228-8900
FX: 305-228-8481
LIC CA#27947

Project Title: VIOLATION CASE #20150169913

Owner: MARTHA NOGUERA

Address: 6002 SW 155 CT, MIAMI, FLORIDA, 33193

REVISIONS

DESCRIPTION
Date:
03-06-15

SHEET NO.
A-1