SOMERSET ACADEMY
AT PINEWOOD ACRES

9500 SW 97TH AVE
MIAMI, FL 33176

APPLICANT:
- LONES FAMILY, LP.
- PINEWOOD ACRES SCHOOL INC.
- LEE S. JUDY C. LONES

ISSUED FOR: D.I.C. SUBMITTAL

DATE: 10.25.2013
CIVICA PROJECT: 129915

A R C H I T E C T:

CIVICA
L L C
ARCHITECTURE & URBAN DESIGN

8323 NW 12th St. Suite 106
Doral, FL 33126
tel: 305.593.9959

AA #26001093

T R A F F I C E N G I N E E R

RGA
RICHARD GARCIA & ASSOCIATES, INC.
13117 NW 107th AVENUE, UNIT #4
HIALEAH GARDENS, FL 33018
TEL: (305) 595-7505

INDEX OF DRAWINGS

	COVER
	SURVEY
A-1.0	SITE PLAN
A-2.0	PHASING PLAN
A-3.0	1ST FLOOR PLAN (SOUTH SITE)
A-3.1	2ND FLOOR PLAN (SOUTH SITE)
A-4.0	1ST & 2ND FLOOR PLAN (NORTH SITE)
A-5.0	ELEVATIONS
A-6.0	3D RENDERINGS
A-7.0	SITE DETAILS
LA-1	EXISTING TREE DISPOSITION PLAN
LA-2	EXISTING TREE DISPOSITION LIST
LA-3	PLANTING PLAN
LA-4	PLANTING PLAN
LA-5	PLANTING PLAN
LA-6	LANDSCAPE SPECIFICATIONS AND DETAILS

PROJECT LOCATION

LOCATION MAP
N.T.S.

LEGAL DESCRIPTION

FOLIO # 30-5005-002-0220, 30-5005-000-0120, 30-5005-000-0130, 30-5005-000-0150, 30-5005-000-0252

Lots 27 and 28, less the West 900 feet and the East 15 feet thereof, in GREATER MIAMI DEVELOPMENT, SECTION A, as recorded in Plat Book 14, Page 65, of the Public Records of Miami Dade County, Florida; less that portion lying within the South 10 feet of said Lot 28; and less the area bounded by the North line of the South 10 feet of said Lot 28 and bounded by the West line of the East 15 feet of said Lot 28 and bounded by a 25 foot radius arc concave to the Northwest, said arc being tangent to both of the last described lines; And

The West 399.3 feet of the East 439.3 feet of the North 1/2 of the Northeast 1/4 of the Southeast 1/4, less the South 225 feet and the North 35 feet thereof, in Section 5, Township 55 South, Range 40 East, Miami-Dade County, Florida, less the area bounded by the South line of the North 35 feet of the North 1/2 of the Northeast 1/4 of the Southeast 1/4 of said Section 5 and bounded by the West line of the East 40 feet of the North 1/2 of the Northeast 1/4 of the Southeast 1/4 of said Section 5 and bounded by a 25 foot radius arc concave to the Southwest, said arc being tangent to both of the last described lines; And

The North 1/2 of the North 1/2 of the Northeast 1/4 of the Southeast 1/4, less the West 798.32 feet and less the East 439.3 feet and less the North 35.00 feet for road, of Section 5, Township 55 South, Range 40 East, lying and being in Miami-Dade County, Florida; And

The South 225 feet of the East 237.15 feet of the North 1/2 of the Northeast 1/4 of the Southeast 1/4 of Section 5, Township 55 South, Range 40 East, Miami-Dade County, FLorida, less the East40 feet and the South 25 feet thereof.

RECEIVED
212-156
JAN 05 2015
MIAMI-DADE COUNTY
DEPARTMENT OF BUSINESS ADMINISTRY AND ECONOMIC RESOURCES DEVELOPMENT SERVICES
By

REVISIONS

NO.	DATE	REVISION
1	01.03.2014	DIC COMMENTS (3rd Deficiency Ltr)
2	02.04.2014	PUBLIC WORKS (Traffic Comments)
3	07.28.2014	PUBLIC WORKS MEMO (T.E.D. COMMENTS)
4	11.21.2014	PUBLIC WORKS MEMO (T.E.D. COMMENTS)
5	06.26.2014	TREE DEPARTMENT (DERM)
6	12.04.2015	TREE DEPARTMENT (DERM)

KNOX PADLOCK MODEL 3753 -

EXTERIOR ALL CONDITIONS 3/8 IN. DIAMETER STAINLESS STEEL SHACKLE WITH 2-1/8 IN. CLEARANCE. PADLOCK DESIGNED TO SECURE EXTERIOR PERIMETER AND FIRE ACCESS GATES. HEAVY-DUTY BRASS BODY PROTECTED BY EPDM BOOT WITH SHACKLE SEAL. MEDECO LOCK CYLINDER HAS UL-437 RATING.

KNOX PADLOCK (FIRE DEPT. ACCESS) 10 / A-7.0

N.T.S.

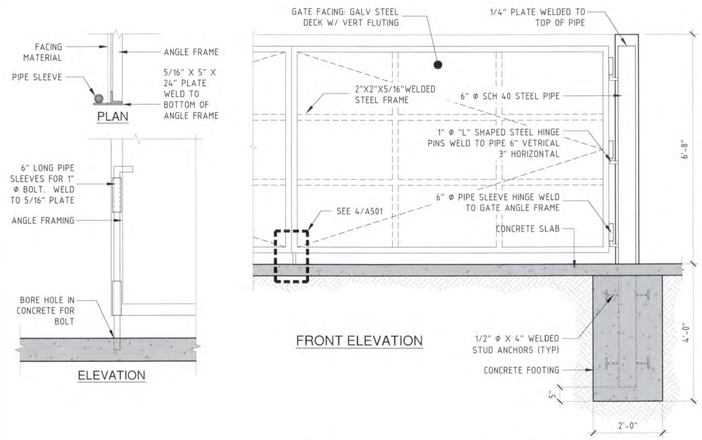

DUMPSTER ENCLOSURE GATE 7 / A-7.0

8'-0" 4'-0" 2'-0" 0

SCALE: 1/2" = 1'-0"

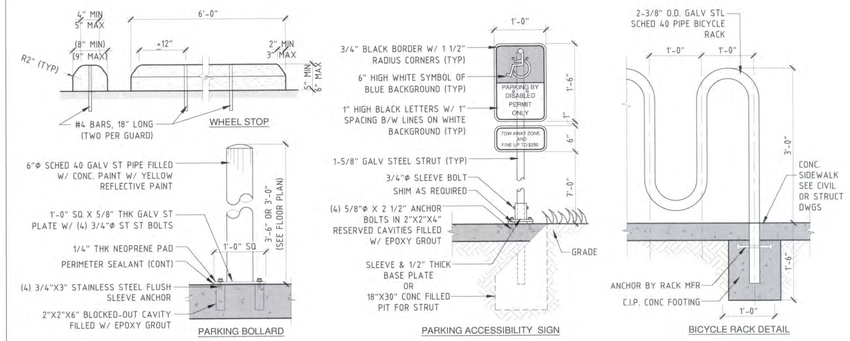

MISCELLANEOUS. SITE DETAILS 4 / A-7.0

5'-4" 2'-8" 1'-4" 0

SCALE: 3/4" = 1'-0"

Single Switch
Model 3502

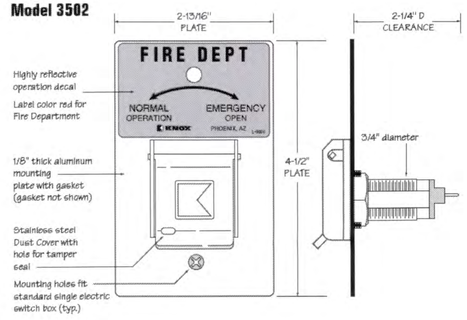

KNOX KEY SWITCH (FIRE DEPT. ACCESS) 9 / A-7.0

N.T.S.

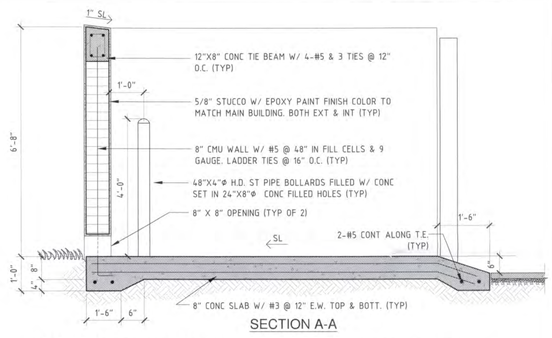

DUMPSTER ENCLOSURE SECT A-A 6 / A-7.0

8'-0" 4'-0" 2'-0" 0

SCALE: 1/2" = 1'-0"

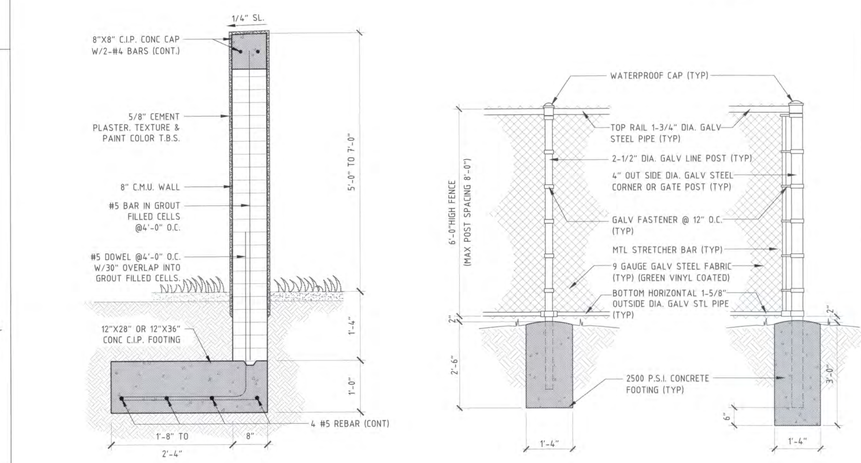

PROPERTY WALL 3 / A-7.0

5'-4" 2'-8" 1'-4" 0

SCALE: 3/4" = 1'-0"

CHAINLINK FENCE DETAIL 2 / A-7.0

8'-0" 4'-0" 2'-0" 0

SCALE: 1/2" = 1'-0"

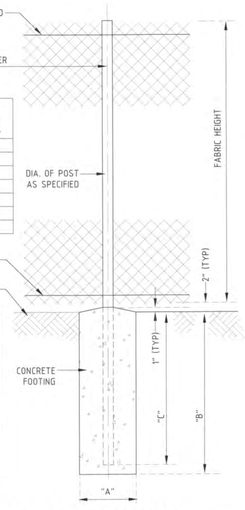

GATE POST

GATE LEAF WIDTH	GATE POST (OD)	FABRIC HEIGHT	"A" DIAM	"B" DEPTH	"C" POST EMBED.
3' TO 6'	2.875"	3' TO 5'	12"	38"	36"
		6' TO 9'	14"	42"	40"
		10' TO 12'	16"	46"	44"
7' TO 12'	4.000"	3' TO 5'	14"	38"	36"
		6' TO 9'	16"	42"	40"
		10' TO 12'	18"	46"	44"
13'	6.625"	8'-0"	16"	42"	40"

LINE AND TERMINAL POSTS

FABRIC HEIGHT	TYPE POST	"A" DIAM	"B" DEPTH	"C" POST EMBEDMENT
3'-0" TO 4'-0"	LINE	6"	26"	24"
	TERMINAL	10"	32"	30"
5'-0"	LINE	8"	32"	30"
	TERMINAL	10"	32"	30"
6'-0" TO 9'-0"	LINE	12"	38"	36"
	TERMINAL	12"	38"	36"
10'-0" TO 12'-0"	LINE	18"	38"	36"
	TERMINAL	18"	38"	36"
13'-0" TO 18'-0"	LINE	24"	42"	40"
	TERMINAL	24"	42"	40"

NOTE: TERMINAL POSTS INCLUDE END, CORNER, AND PULL POSTS

CHAIN LINK FENCE FOUNDATION 8 / A-7.0

N.T.S.

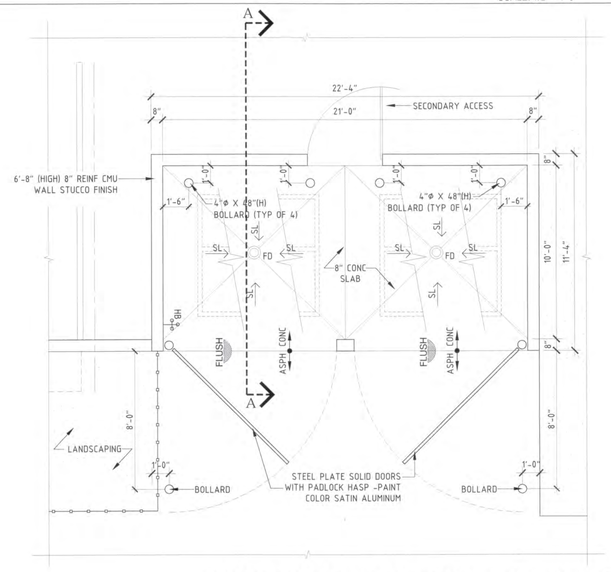

DUMPSTER ENCLOSURE PLAN 5 / A-7.0

16'-0" 8'-0" 4'-0" 0

SCALE: 1/4" = 1'-0"

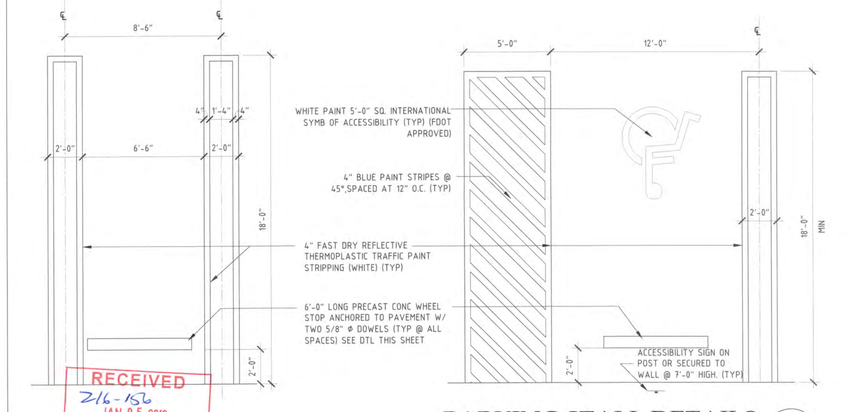

RECEIVED
2/6-156
JAN 05 2016
MIAMI-DADE COUNTY
DEPARTMENT OF REGULATORY AND ECONOMIC RESOURCES
DEVELOPMENT SERVICES

PARKING STALL DETAILS 1 / A-7.0

16'-0" 8'-0" 4'-0" 0

SCALE: 1/4" = 1'-0"

CIVICA
ARCHITECTURE & URBAN DESIGN
8323 NW 12th St. Suite 106
Doral, FL 33126
tel: 305.593.9959
AA #26001093
www.civicagroup.com
info@civicagroup.com

PROJECT:

SOMERSET ACADEMY AT PINEWOOD ACRES

9500 SW 97TH AVE
MIAMI, FL 33176

APPLICANT:

- LONES FAMILY, LP.
- PINEWOOD ACRES SCHOOL INC.
- LEE S. JUDY C. LONES

ISSUED FOR:

D.I.C. SUBMITTAL

CIVICA PROJECT No :
129915

No.	DATE	REVISION	BY

DRAWN BY	APPROVED BY
AD, TM	RL
DATE	SCALE:
JAN. 26, 2015	AS SHOWN

SEAL/SIGNATURE

12.04.15

ROLANDO LLANES
AR - 0013160

This drawing is the property of CIVICA and is not to be reproduced or copied in whole or part. It is not to be used on any other project and is to be returned on request.
COPYRIGHT © 2015

SHEET TITLE

STANDARD SITE DETAILS

SHEET NUMBER

A-7.0