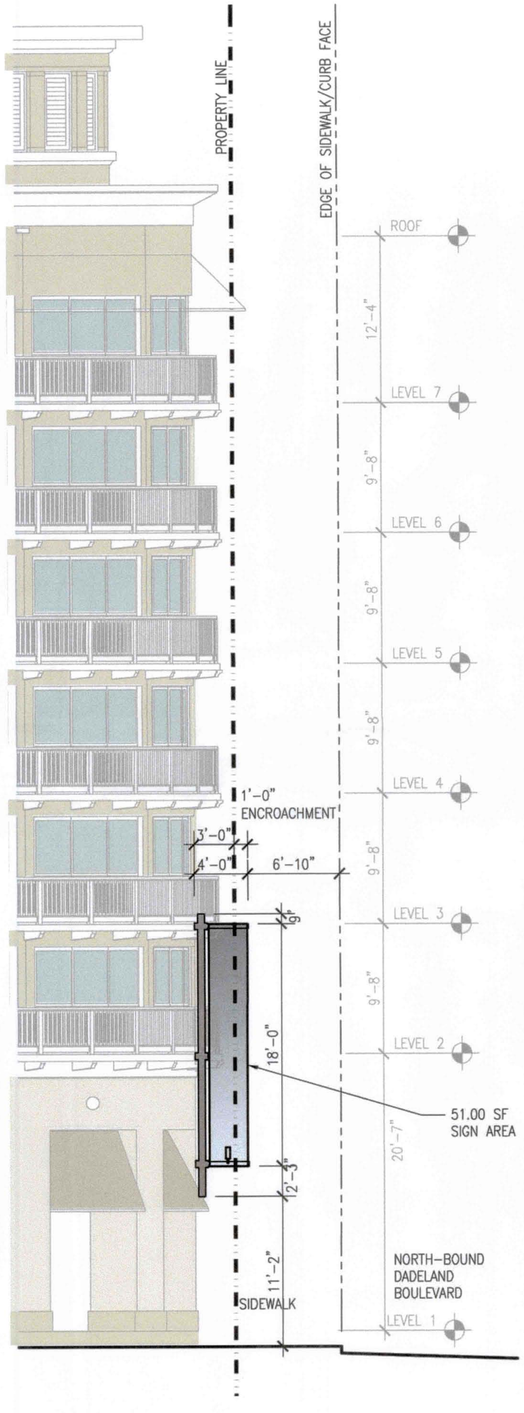

PROPOSED PARTIAL ELEVATION
ALONG NORTH KENDALL DRIVE
1/8"=1'-0"

PROPOSED PARTIAL ELEVATION
ALONG DADELAND BOULEVARD
1/8"=1'-0"

DOWNTOWN DADELAND
A VILLAGE WITHIN A CITY

TYPE 1 BANNER SIGN
BUILDING ELEVATIONS

Board of County
Commissioners Hearing
10.12.11

DOWNTOWN DADELAND
7270 NORTH KENDALL DRIVE
MIAMI, FL 33156

ZONING HEARING PLANS REVIEW
☐ PLANS WITHIN THE SCOPE OF AD
☐ PLANS NOT WITHIN THE SCOPE OF AD
REVIEWED BY: Daral
ON: __/__/__
ZONING EVALUATOR
☑ PLANS ACCEPTABLE
☐ NOT ACCEPTABLE
By: 10/19/11

RECEIVED
OCT 19 2011
ZONING HEARINGS SECTION
MIAMI-DADE PLANNING AND ZONING DEPT.
BY: AD

One Biscayne Tower
Suite 1670
Two South Biscayne Blvd
Miami, FL 33131
T. 305.482.8700
F. 305.482.8770
www.addinc.com

ADD Inc
Lic#: AA26001507
Jonathan Cardello
Lic#: AR93391

ADD Inc
ARCHITECTURE + DESIGN

PROJECT #09163.00

A-9

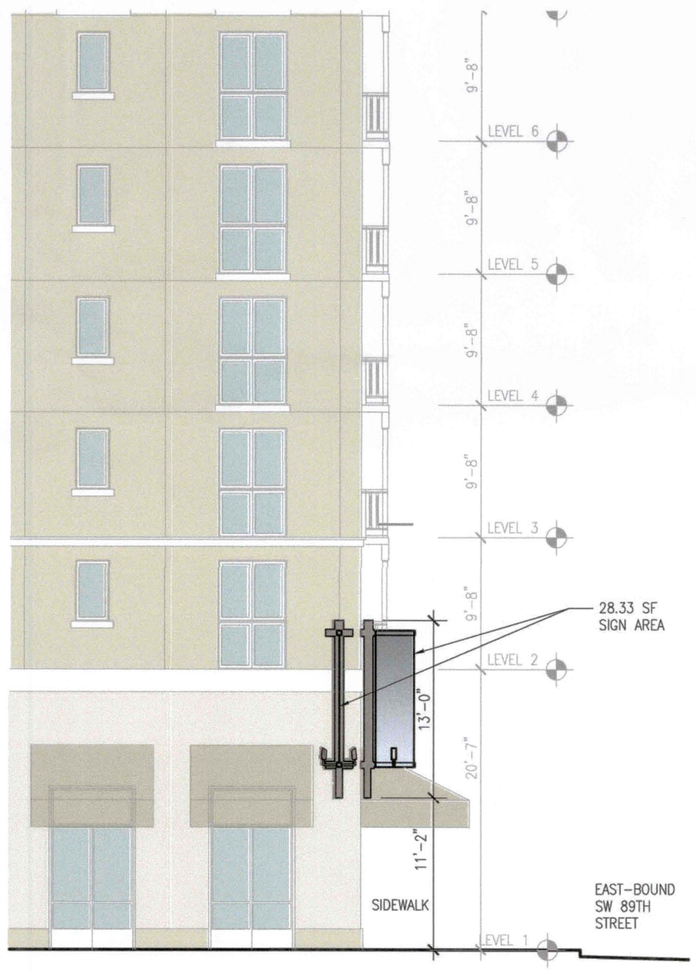

PROPOSED PARTIAL ELEVATION
ALONG SW 72ND COURT
1/8"=1'-0"

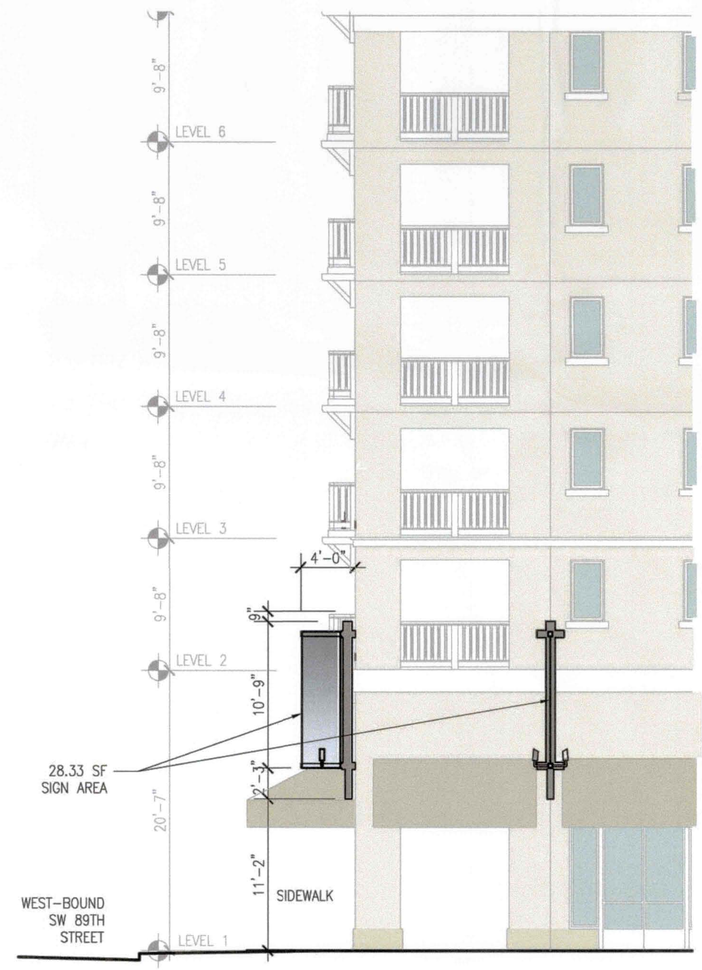

PROPOSED PARTIAL ELEVATION
ALONG SW 72ND COURT
1/8"=1'-0"

DOWNTOWN DADELAND
A VILLAGE WITHIN A CITY

TYPE 2 BANNER SIGN BUILDING ELEVATIONS

Board of County
Commissioners Hearing
10.12.11

DOWNTOWN DADELAND
7270 NORTH KENDALL DRIVE
MIAMI, FL 33156

ZONING HEARING PLANS REVIEW
☑ PLANS WITHIN THE SCOPE OF AD
☐ PLANS NOT WITHIN THE SCOPE OF AD
REVIEWED BY: Pandi
ON: / /
ZONING EVALUATOR
☑ PLANS ACCEPTABLE
☐ NOT ACCEPTABLE
By: 10.19.11

RECEIVED
210 CAV
OCT 19 2011
ZONING HEARINGS SECTION
MIAMI-DADE PLANNING AND ZONING DEPT.
BY: HJ

One Biscayne Tower
Suite 1670
Two South Biscayne Blvd
Miami, FL 33131
T. 305.482.8700
F. 305.482.8770
www.addinc.com

ADD Inc
Lic#: AA26001507
Jonathan Cardello
Lic#: AR93391

ARCHITECTURE + DESIGN
ADD Inc

PROJECT #09163.00

A-10

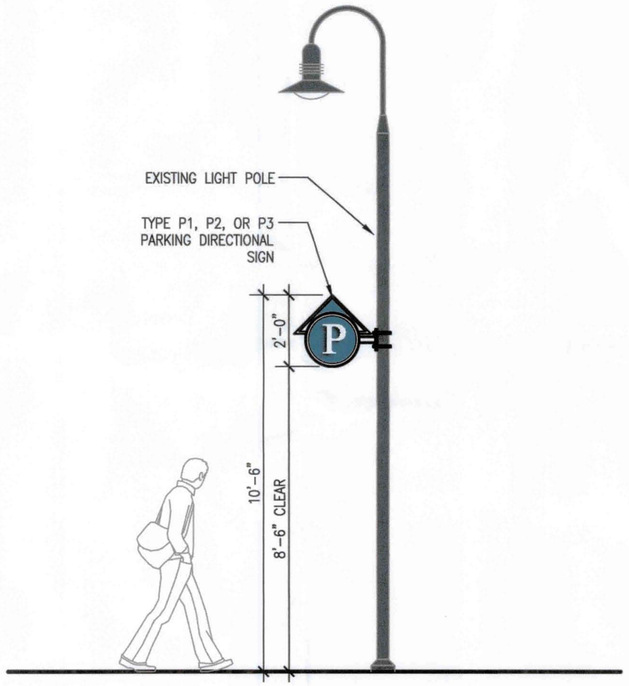

PROPOSED SIGN ELEVATION
1/2"=1'-0"

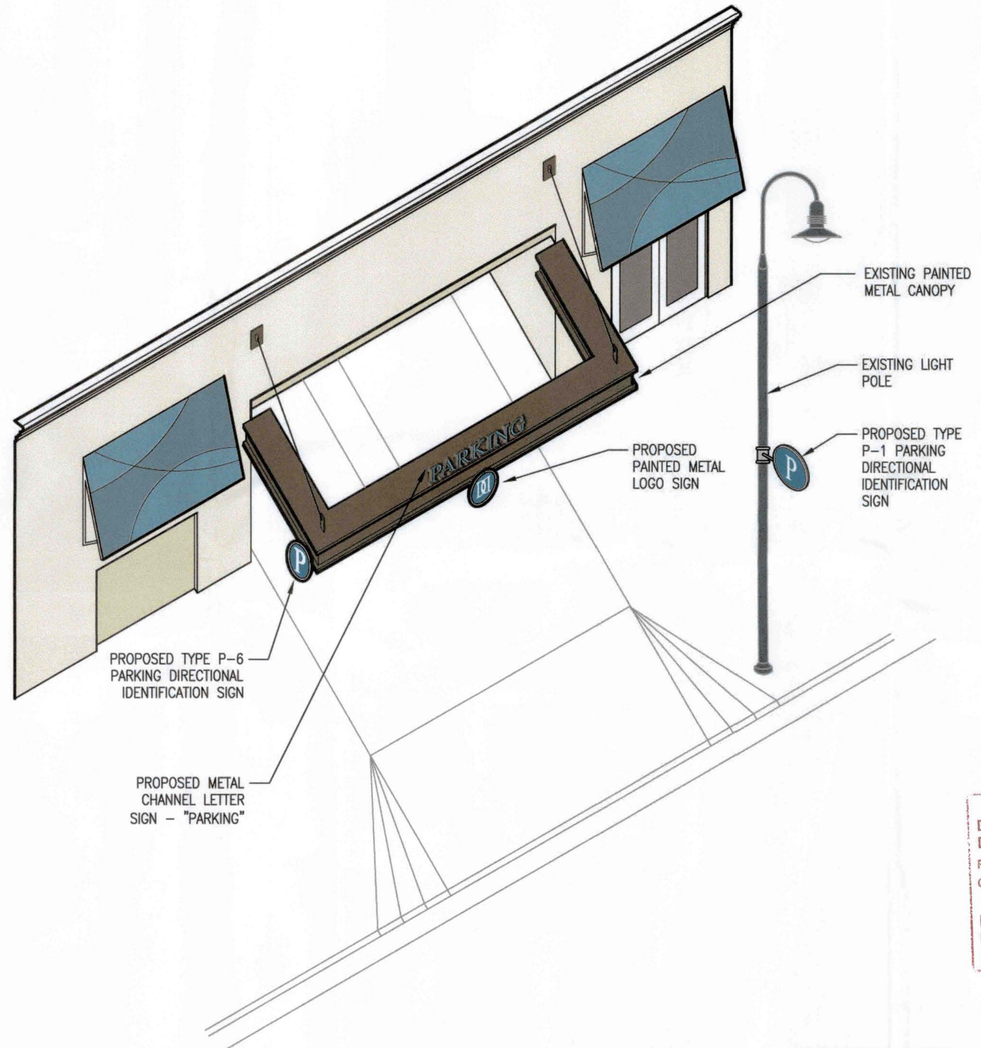

PROPOSED AERIAL VIEW OF GARAGE ENTRANCE AND EXIT
NO SCALE

ZONING HEARING PLANS REVIEW
☑ PLANS WITHIN THE SCOPE OF AD
☐ PLANS NOT WITHIN THE SCOPE OF AD
REVIEWED BY: Dandi
ON: __/__/__
ZONING EVALUATOR
☑ PLANS ACCEPTABLE
☐ NOT ACCEPTABLE
By: 10/19/11

RECEIVED
210-047
OCT 19 2011
ZONING HEARINGS SECTION
MIAMI-DADE PLANNING AND ZONING DEPT.
BY: XD

DOWNTOWN DADELAND
A VILLAGE WITHIN A CITY

PARKING DIRECTIONAL SIGNS - AXONOMETRIC

Board of County Commissioners Hearing
10.12.11

DOWNTOWN DADELAND
7270 NORTH KENDALL DRIVE
MIAMI, FL 33156

One Biscayne Tower
Suite 1670
Two South Biscayne Blvd
Miami, FL 33131
T. 305.482.8700
F. 305.482.8770
www.addinc.com

ADD Inc
Lic#: AA26001507
Jonathan Cardello
Lic#: AR93391

ARCHITECTURE + DESIGN
ADD Inc

PROJECT #09163.00

A-11

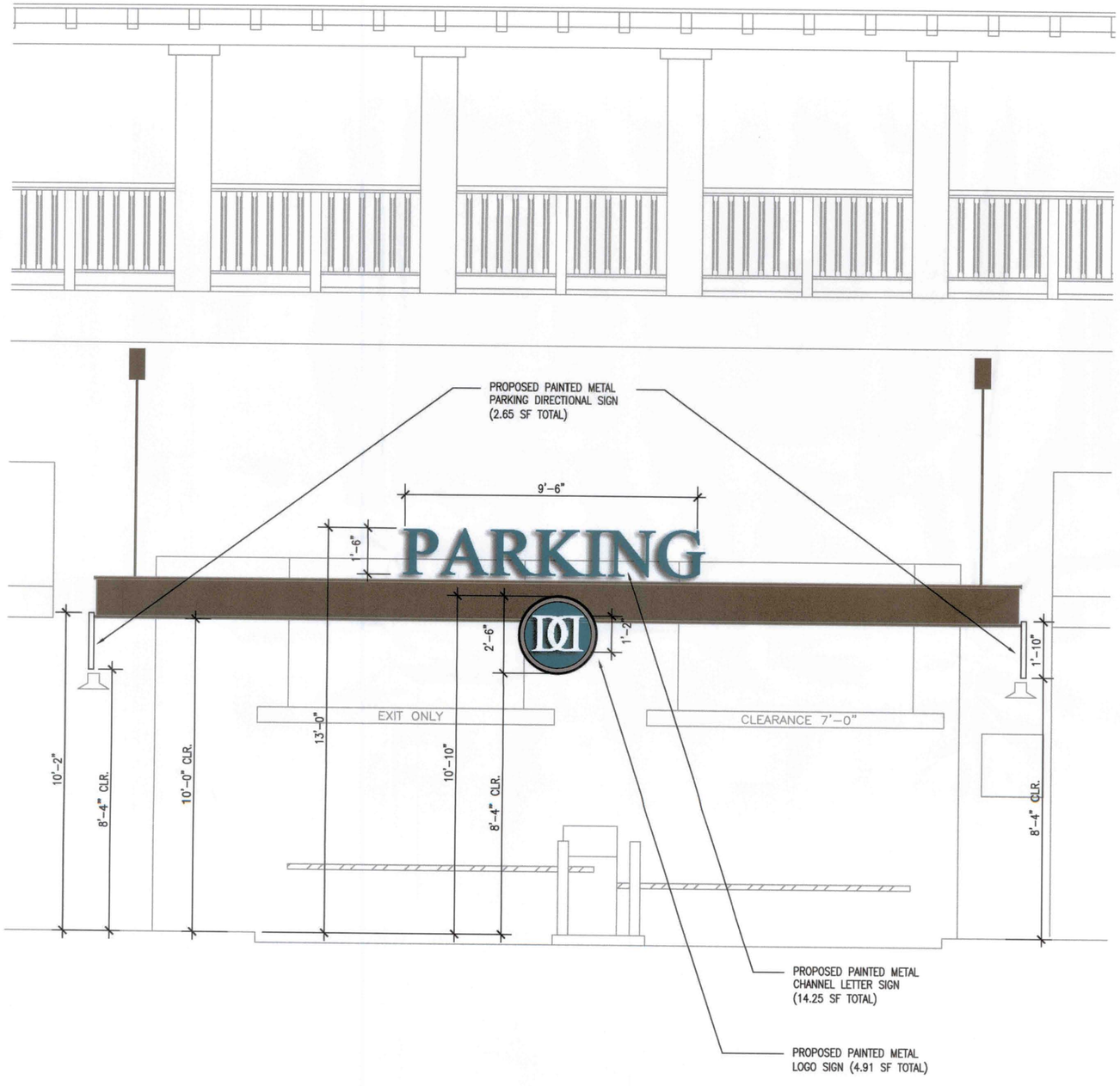

PROPOSED FRONT ELEVATION
1/2"=1'-0"

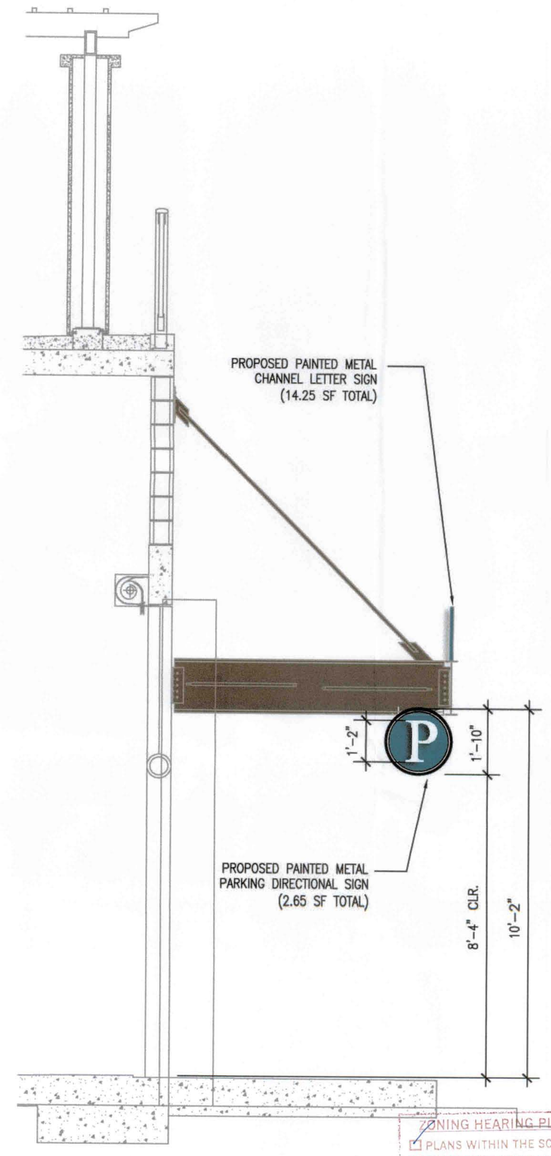

PROPOSED SIDE ELEVATION
1/2"=1'-0"

ZONING HEARING PLANS REVIEW
☑ PLANS WITHIN THE SCOPE OF AD
☐ PLANS NOT WITHIN THE SCOPE OF AD
REVIEWED BY: panda
ON: ___/___/___
ZONING EVALUATOR
☑ PLANS ACCEPTABLE
☐ NOT ACCEPTABLE
By: 10/19/11

RECEIVED
210.044
OCT 19 2011
ZONING HEARINGS SECTION
MIAMI-DADE PLANNING AND ZONING DEPT.
BY: ATL

DOWNTOWN DADELAND
A VILLAGE WITHIN A CITY

PARKING
GARAGE ENTRY/EXIT
SIGN ELEVATION

Board of County
Commissioners Hearing
10.12.11

DOWNTOWN DADELAND
7270 NORTH KENDALL DRIVE
MIAMI, FL 33156

One Biscayne Tower
Suite 1670
Two South Biscayne Blvd
Miami, FL 33131
T. 305.482.8700
F. 305.482.8770
www.addinc.com

ADD Inc
Lic#: AA26001507
Jonathan Cardello
Lic#: AR93391

ARCHITECTURE + DESIGN
ADD Inc

PROJECT #09163.00

A-12

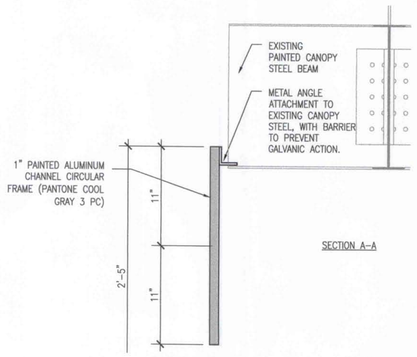

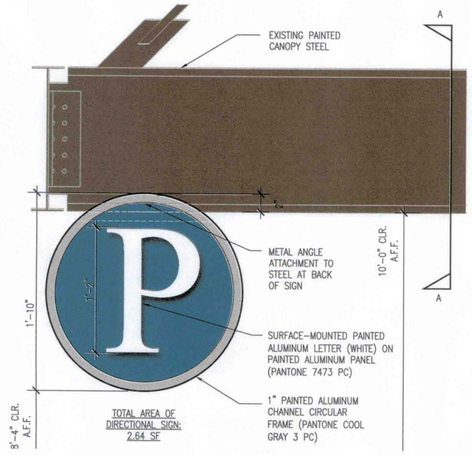

GARAGE ENTRY / EXIT SIGN
1-1/2"=1'-0"

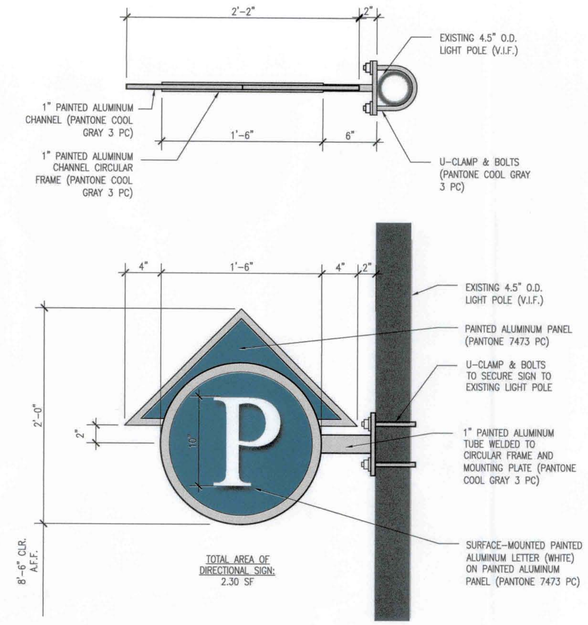

DIRECTIONAL SIGN TYPE P2
1-1/2"=1'-0"

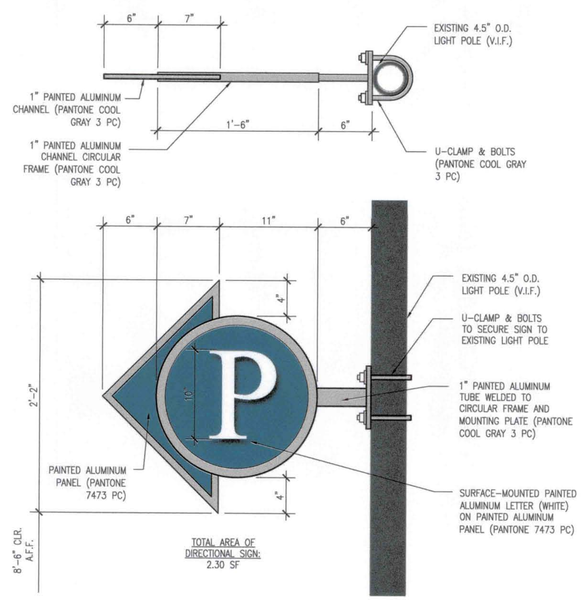

DIRECTIONAL SIGN TYPE P3
1-1/2"=1'-0"

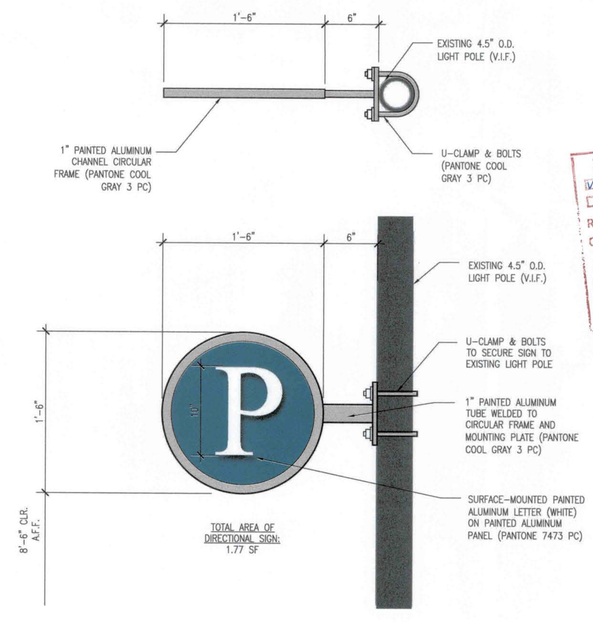

DIRECTIONAL SIGN TYPE P1
1-1/2"=1'-0"

ZONING HEARING PLANS REVIEW
☑ PLANS WITHIN THE SCOPE OF AD
☐ PLANS NOT WITHIN THE SCOPE OF AD
REVIEWED BY: Dandi
ON: / /
ZONING EVALUATOR
☑ PLANS ACCEPTABLE
☐ NOT ACCEPTABLE
By: 10/19/11

RECEIVED
210-041
OCT 19 2011
ZONING HEARINGS SECTION
MIAMI-DADE PLANNING AND ZONING DEPT.
BY: AKT

DOWNTOWN DADELAND
A VILLAGE WITHIN A CITY

PARKING GARAGE DIRECTIONAL SIGN DETAILS

Board of County Commissioners Hearing
10.12.11

DOWNTOWN DADELAND
7270 NORTH KENDALL DRIVE
MIAMI, FL 33156

One Biscayne Tower
Suite 1670
Two South Biscayne Blvd
Miami, FL 33131
T. 305.482.8700
F. 305.482.8770
www.addinc.com

ADD Inc
Lic#: AA26001507
Jonathan Cardello
Lic#: AR93391

ADD Inc
ARCHITECTURE + DESIGN

PROJECT #09163.00

A-13