EUREKA COVE LLC

At S.W. 178 Terrace and S.W. 176th St.

INDEX OF DRAWINGS

SURVEYOR	CIVIL	LANDSCAPE	ARCHITECTS	STRUCTURE	MEP
MAP OF BOUNDARY SURVEY					

MP-1 SITE PLAN AND ZONING DATA
MP-2 MASTER PLAN
MP-3 LOTS TABULATION
MP-4 LANDSCAPING PLAN
MP-5 VEHICULAR CIRCULATION PLAN
MP-6 TH - FLOORPLANS (8 UNIT BUILDING)
MP-7 TH - ELEVATIONS (8 UNIT BUILDING)
MP-8 TH - FLOORPLANS (6 UNIT BUILDING)
MP-9 TH - ELEVATIONS (6 UNIT BUILDING)

ZONING HEARING PLANS REVIEW

☒ PLANS WITHIN THE SCOPE OF AD
☐ PLANS NOT WITHIN THE SCOPE OF AD

REVIEWED BY: JSH
ON: 8/21/06
ZONING EVALUATOR
☒ PLANS ACCEPTABLE
☐ NOT ACCEPTABLE
By: 8/21/06

MARTIN A.D. YABOR & ASSOC., INC.
AA 0002791
ARCHITECTS PLANNERS INTERIORS
12144 S.W. 131 AVENUE MIAMI, FLORIDA 33186

Rev #3

RECEIVED
206-003
AUG 21 2006
ZONING HEARINGS SECTION
MIAMI-DADE PLANNING AND ZONING DEPT.
BY JSH

EUREKA COVE LLC

At S.W. 178 Terrace and S.W. 176 ST.

SITE PLAN & TABULATION DATA

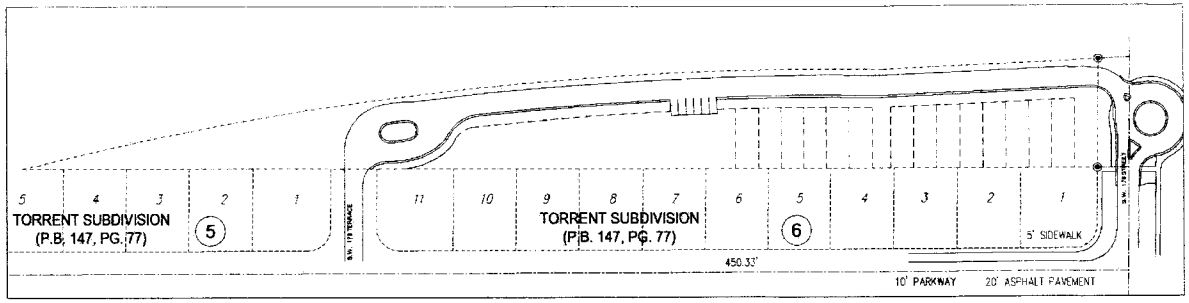

GENERAL LOCATOR MAP.
N.T.S

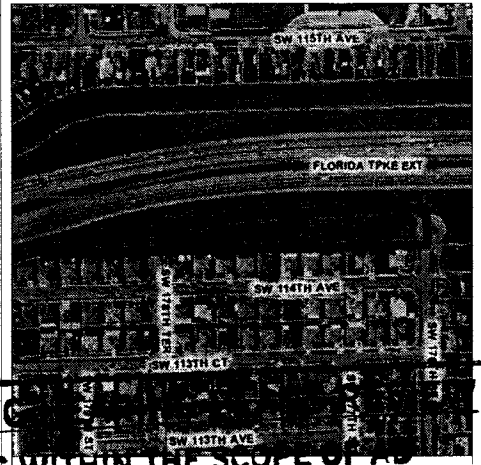

PARCEL LOCATOR MAP

Legal Description:

A portion of the southwest 1/4 of section 31, Township 55 South, range 40 East being bounded on the west by the easterly right-of-way line of the Homestead extension of Florida's Turnpike (state road #821). As shown on the Florida Department of Transportation. Right-of-way map, Section 87005-23-6. Sheet 11 of 25. Dated May 1970, and bounded on the East by the West line of the East 1/2 of the Southwest 1/4 of said section 31, also being the Westerly boundary line of "TORRENT SUBDIVISION". According to the plat thereof as recorded in plat book 147, at page 77 of the public records of MIAMI DADE COUNTY, FLORIDA and bounded on the North by the South line of the North 35.0 feet of the Southwest 1/4 of said section 31, all lying and being in the Southwest 1/4 of section 31, Township 55 South, range 40 east . MIAMI DADE COUNTY FLORIDA.

LEGAL DESCRIPTION

PROJECT DATUM	PROVIDED	REQUIRED/ALLOWED
NET LAND AREA	191,833.91 s.f.(4.34 ACRES)	
NET DENSITY	14 units or 3.69 unit/net acre	14.84 units or 4.68 unit/net acre
EXISTING ZONING	AU	
PROPOSED ZONING	RU-1M	
BUILDING LOT COVERAGE	13,236.36 S.F. (10.69 %)	
PAVED AREA	17,874.42 S.F. (14.09%)	
PERVIOUS AREA	68,351.74 S.F. (37.09 %)	
IMPERVIOUS AREA	33,577.67 S.F. (22.09 %)	
OPEN SPACE CRITERIA:		
PRIVATE OPEN SPACE	1,386.16 S.F.	450 s.f/u= 1,050 S.F.
COMMON OPEN SPACE	41,769.56 S.F. (21.88 %)	20%
TOTAL NUMBER OF UNITS	14 Units	14 Units
PARKING SPACES:	34	32
BUILDING SETBACKS		
FRONT SETBACK	25 FEET	25 FEET
REAR SETBACK	15 FEET	15 FEET
STREET SIDE	5 FEET	5 FEET
INTERIOR SIDE	5 FEET	5 FEET
BETWEEN BUILDINGS	20 FEET	20 FEET
MINIMUM LOT SIZE	1,736.51 SQ.FT. AVG.	1,500 SQ.FT.
LOT WIDTH	20 FEET	N/A
LOT DEPTH	VARIES	N/A

NOTE: ALL AREAS ARE SHOWN IN SQUARE FEET WITH SOME EXCEPTIONS

UTILITY AND SERVICE COMPANIES FOR THE DEVELOPMENT

TELEPHONE COMPANY: BELLSOUTH
ELECTRIC UTILITY: FLORIDA POWER AND LIGHT
WATER AUTHORITY: MIAMI-DADE WATER AND SEWER AUTHORITY
SEWER AUTHORITY: MIAMI-DADE WATER AND SEWER AUTHORITY
GARBAGE AND TRASH COLLECTION SERVICE: MIAMI-DADE DEPARTMENT OF SOLID WASTE

AVERAGE LOT SIZES			
	TOTAL SQ. FEET	NUMBER OF UNITS	AVERAGE LOT SIZE
TOWNHOUSE	24,311.16 S.F.	14	1,736.51 SQ.FT.

ESTIMATE OF POPULATION/PROJECTED FOR DEVELOPMENT: 3.5 PERSONS/DWELLING UNIT (14 Dwelling Units x 3.5 People = 49 People)

Revisions

No.	Date	Description

MARTIN A. D. YABOR AIA, NCARB
Lic. # AR0015352

COPYRIGHT 2003 ALL RIGHTS RESERVED. THESE DRAWINGS AND SPECIFICATIONS ARE INSTRUMENTS OF SERVICE AND SHALL REMAIN THE PROPERTY OF MARTIN A. DAD YABOR & ASSOC. WHETHER THE PROJECTION WHICH THEY WERE PREPARED IS EXECUTED OR NOT. THEY ARE NOT TO BE USED IN ANY MANNER OR OTHER PROJECTS OR EXTENSIONS TO THIS PROJECT EXCEPT BY AGREEMENT IN WRITING AND WITH THE APPROPRIATE COMPENSATION TO MARTIN A. DAD YABOR & ASSOC. REPRODUCTIONS OF DRAWINGS AND SPECIFICATIONS WITHOUT THE WRITTEN CONSENT OF MARTIN A. DAD YABOR & ASSOC. IS PROHIBITED. CONTRACTOR IS RESPONSIBLE FOR VERIFYING ALL SITE CONDITIONS PRIOR TO PROCEEDING WITH WORK

MP-1

Schematic Design

ZONING
☒ PLANS WITHIN THE SCOPE OF AD
☐ PLANS NOT WITHIN THE SCOPE OF AD
REVIEWED BY: JFA
8/21/06
ZONING EVALUATOR
☒ PLANS ACCEPTABLE
☐ NOT ACCEPTABLE
By: 8/21/06

MARTIN A.D. YABOR & ASSOC., INC.
AA0002791
ARCHITECTS PLANNERS INTERIORS
[illegible] AVENUE MIAMI, FLORIDA 33156

Rev#3
RECEIVED
206-003
AUG 21 2006
ZONING HEARINGS SECTION
MIAMI-DADE PLANNING AND ZONING DEPT.
BY JFA

EUREKA COVE LLC

At S.W. 178 Terrace and S.W. 176 ST.

MASTER PLAN

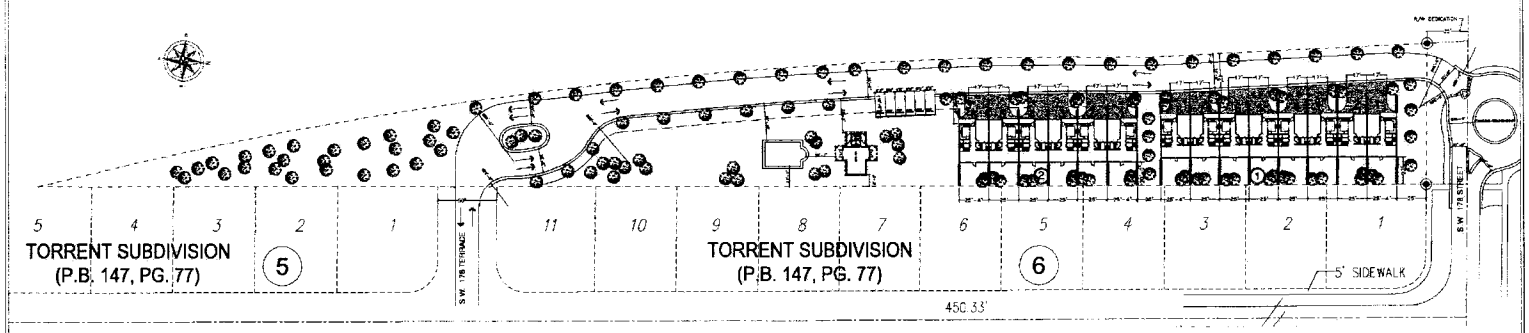

MASTER PLAN

SCALE: 1"=50'-0"

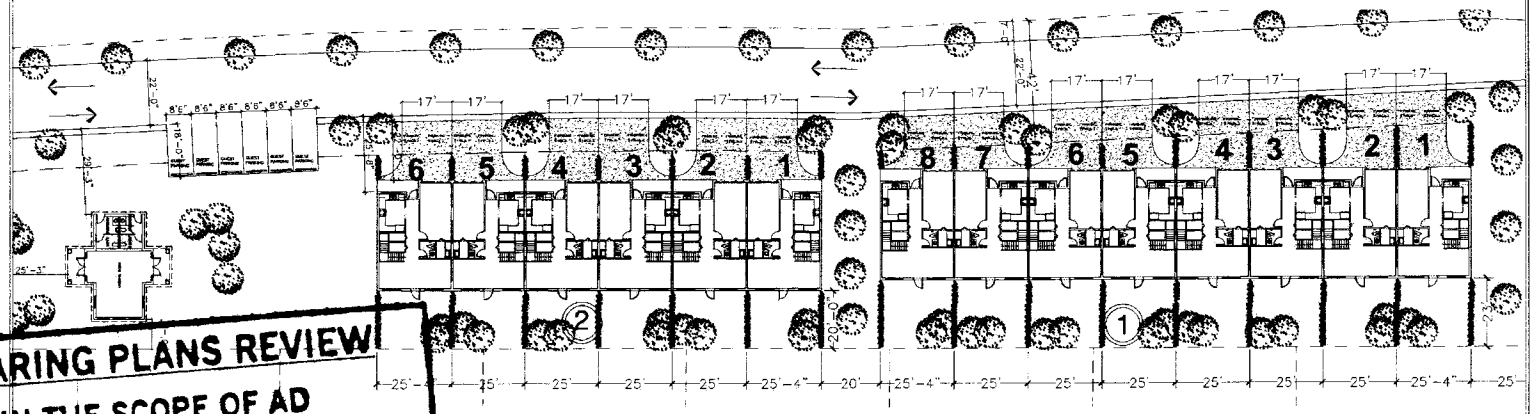

MASTER PLAN (DETAIL)

SCALE: 1"=20'-0"

Revisions

MARTIN A. D. YABOR AIA, NCARB

MP-2

Schematic Design

ZONING HEARING PLANS REVIEW

☒ PLANS WITHIN THE SCOPE OF AD

☐ PLANS NOT WITHIN THE SCOPE OF AD

REVIEWED BY: DJA

ON: 8/21/06

ZONING EVALUATOR

☒ PLANS ACCEPTABLE

☐ NOT ACCEPTABLE

By: 8/21/06

MARTIN A.D. YABOR & ASSOC., INC.

AA 0002791

ARCHITECTS PLANNERS INTERIORS

Rev#3

RECEIVED

206-003

AUG 21 2006

ZONING HEARINGS SECTION

MIAMI-DADE PLANNING AND ZONING DEPT

BY DJA

EUREKA COVE LLC

At S.W. 178 Terrace and S.W. 176 ST.

LOTS TABULATION

BLOCK #	LOT #	DIMENSIONS W X L	AREA S.F.	ATTACHED DETACHED	CORNER OR INFILL
1	1	25'-4" X 75'-3"	1907.24	ATACHED	CORNER
	2	25'-0" X 74'-1"	1853.17	ATACHED	INFILL
	3	25'-0" X 73'-0"	1824.39	ATACHED	INFILL
	4	25'-0" X 72'-0"	1795.60	ATACHED	INFILL
	5	25'-0" X 70'-8"	1766.82	ATACHED	INFILL
	6	25'-0" X 69"-6"	1738.04	ATACHED	INFILL
	7	25'-0" X 68'-5"	1709.26	ATACHED	INFILL
	8	25'-4" X 67'-4"	1702.71	ATACHED	CORNER
2	1	25'-4" X 66'-7"	1687.59	ATACHED	CORNER
	2	25'-0" X 66'-9"	1669.70	ATACHED	INFILL
	3	25'-0" X 66'-9"	1669.63	ATACHED	INFILL
	4	25'-0" X 66'-8"	1665.23	ATACHED	INFILL
	5	25'-0" X 66'-3"	1656.51	ATACHED	INFILL
	6	25'-4" X 65'-9"	1665.27	ATACHED	CORNER

Revisions

No.	Date	Description

MARTIN A. D. YABOR AIA, NCARB

Lic. # AR0019232

COPYRIGHT 2005 ALL RIGHTS RESERVED. THESE DRAWINGS AND SPECIFICATIONS ARE INSTRUMENTS OF SERVICE AND SHALL REMAIN THE PROPERTY OF MARTIN A. DIAZ-YABOR & ASSOC. WHETHER THE PROJECT FOR WHICH THEY WERE PREPARED IS EXECUTED OR NOT, THEY ARE NOT TO BE USED IN ANY MANNER OR OTHER PROJECTS OR EXTENSIONS TO THIS PROJECT EXCEPT BY AGREEMENT IN WRITING AND WITH THE APPROPRIATE COMPENSATION TO MARTIN A. DIAZ-YABOR & ASSOC. REPRODUCTIONS OF DRAWINGS AND SPECIFICATIONS WITHOUT THE WRITTEN CONSENT OF MARTIN A. DIAZ-YABOR & ASSOC. IS PROHIBITED. CONTRACTOR IS RESPONSIBLE FOR VERIFYING ALL SITE CONDITIONS PRIOR TO PROCEEDING WITH WORK.

MP-3

—

Schematic Design

ZONING HEARING PLANS REVIEW

☒ PLANS WITHIN THE SCOPE OF AD

☐ PLANS NOT WITHIN THE SCOPE OF AD

REVIEWED BY: JBH

ON: 8/21/06

ZONING EVALUATOR

☒ PLANS ACCEPTABLE

☐ NOT ACCEPTABLE

By: [signature] 8/21/06

Rev#3

ARCHITECTS PLANNERS INTERIORS

MARTIN A.D. YABOR & ASSOC., INC.

AA 0002791

12124 S.W. 131 AVENUE MIAMI, FLORIDA 33186

RECEIVED

206-003

AUG 21 2006

ZONING HEARINGS SECTION

MIAMI-DADE PLANNING AND ZONING DEPT.

BY JBH

EUREKA COVE LLC

At S.W. 178 Terrace and S.W. 176 ST.

LANDSCAPING PLAN

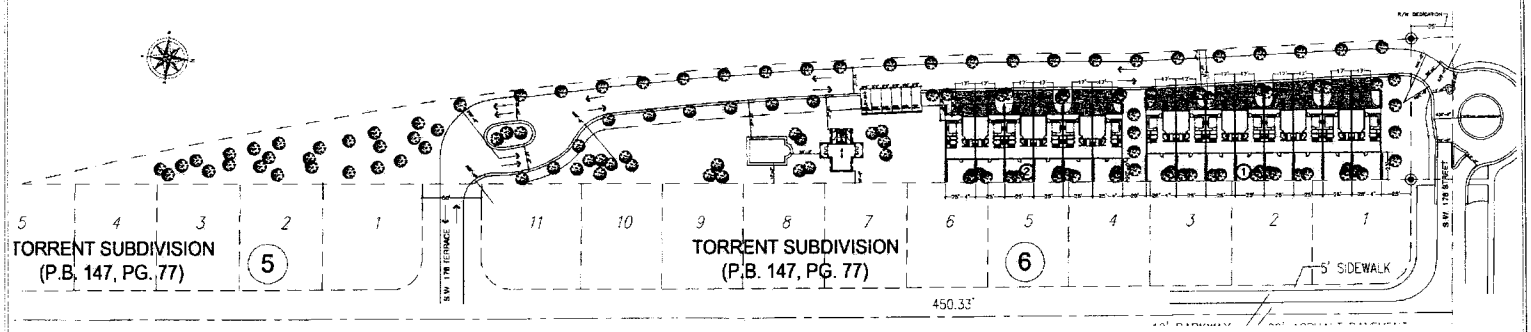

LANDSCAPING PLAN

SCALE:1"=50'-0"

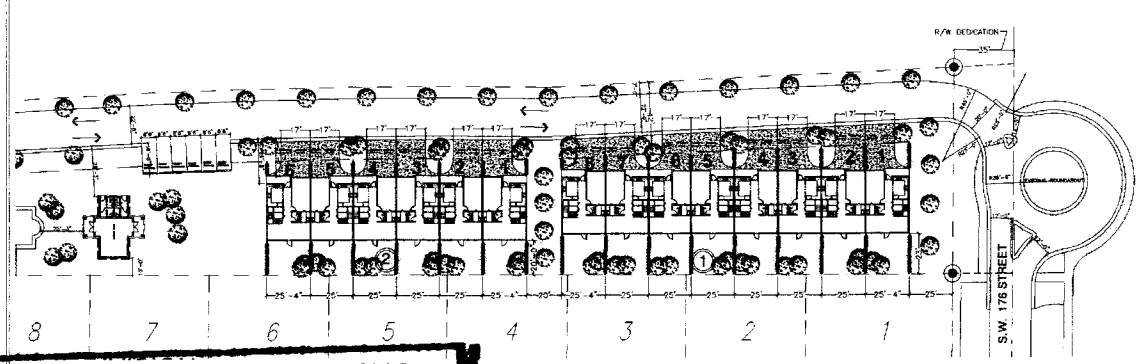

LANDSCAPING PLAN DETAIL

SCALE: N.T.S.

LANDSCAPING REQUIREMENTS		
ZONING DISTR	REQUIRED	PROVIDED
NUMBER OF STREET TREES	(1/30FT)=10	65
NUMBER OF TREES ON LOT	30 TREES X 2=60 NET ACRE=0.34ac=10	84
TOTAL # ON AND STREET TREES	110	149
ARRANGEMENT OF SHRUBS ON LOT	REQ. TREES X 10 = 100	1100
LAWN AREA ON SITE/ATION		
MAX. LAWN AREA	60% OF NET SITE AREA=0.34ac X 60% =0.204ac =8,886.24 sq.ft. (max.sod area) 30% * 30% = 10,332.84 sq.ft.	10,332.84 sq.ft.

LANDSCAPE PLANTING LEGENT.							
MARK	SYMB	QTY.	NATIVE SPECIE	BOTANICAL NAME	COMMON NAME	HEIGHT	CANOPY
CE4		34	YES	CONOCARPUS ERECTUS	GREEN BUTTONWOOD	12'-0"	5'-0" REQUIR.
QV2		66	YES	QUERCUS VIRGINIANA	SOUTHERN LIVE OAK	12'-0"	5'-0" REQUIR.
		500	NO	VIBURNUM SUSPENSUM	SWEET VIBURNUM HEDGE	30" HEIGHT @ 24" LANDSCAPE BUFFER ALONG PROPERTY LINES.	
		500	YES	CHRIOCOCCA ALBA	SNOW BERRY	30" HEIGHT @ 24"	
GRASS		C.O. TO ARCHT. OWNER		ST AUGUSTIN FLORIDANA			

LANDSCAPE NOTES

1.- OVER 50% OF PROVIDED TREES, SHRUBS AND SOD FOR THIS PROJECT ARE NATIVE SPECIES.

2.- TREES IN THE RIGHT OF WAY OR ON PRIVATE PROPERTY WILL REQUIRED PUBLIC WORK APPROVAL OR SPECIAL TAXING DISTRICT.

3.- ALL TREES IN LAWN AREA ARE TO RECEIVE A 24" DIAMETER MULCHED SAUCES AT THE BASE OF THE TRUNK.

4.- ALL PLANT MATERIAL TO BE FLORIDA #1 OR BETTER PURSUANT TO THE FLORIDA DEPARTMENT OF AGRICULTURE'S GRADE AND STANDARDS FOR NURSERY PLANTS

5.- SOD IS TO BE GRADE "A" WEED FREE AND SHALL BE LAY IN ALL LANDSCAPE AREAS NOT COVERED BY SHRUBS OR MULCH.

6.- WEST 97' ADJUSTING ROD ON THE ENTIRE LOT/SHRUBS TO SCREEN ALL OUTDOOR EQUIPMENT MUST BE AT LEAST 60" TALL AND ARE IN ADDITION TO THE REQUIRED NUMBER OF SHRUBS FOR THE BOBS.

Revisions

No.	Date	Description

MARTIN A. D. YABOR AIA, NCARB

Lic. # AR0016382

(COPYRIGHT 2.565 ALL RIGHTS RESERVED) THESE DRAWINGS AND SPECIFICATIONS ARE AN INSTRUMENTS OF SERVICE AND SHALL REMAIN THE PROPERTY OF MARTIN A. D.ALE YABOR & ASSOC. WHEIRER THE PROJECTION WHICH THAT WERE PREPARED IS EXECUTED OR NOT. THEY ARE NOT TO BE USED IN ANY WAYNES OR OTHER PROJECTS OR EXTENSIONS TO THIS PROJECT EXCEPT BY AGREEMENT IN WRITING AND WITH THE APPROPRIATE COMPENSATION TO MARTIN A. D.ALE YABOR & ASSOC. REPRODUCTIONS OF DRAWINGS AND SPECIFICATIONS WITHOUT THE WRITTEN CONSENT OF MARTIN A. D.ALE YABOR & ASSOC. IS PROHIBITED. CONTRACTOR IS RESPONSIBLE FOR VERIFYING ALL SITE CONDITIONS PRIOR TO PROCEEDING WITH WORK

MP-4

Schematic Design

ZONING HEARING PLANS REVIEW

☒ PLANS WITHIN THE SCOPE OF AD

☐ PLANS NOT WITHIN THE SCOPE OF AD

REVIEWED BY: JBA

ON: 8/21/06

ZONING EVALUATOR

☒ PLANS ACCEPTABLE

☐ NOT ACCEPTABLE

By: 8/21/06

MARTIN A.D. YABOR & ASSOC., INC.

AA 0002791

ARCHITECTS PLANNERS INTERIORS

1111 S.W. 12 AVENUE MIAMI, FLORIDA 33130

Rev#3

RECEIVED

206-003

AUG 21 2006

ZONING HEARINGS SECTION

MIAMI-DADE PLANNING AND ZONING DEPT.

BY JBA

EUREKA COVE LLC

At S.W. 178 Terrace and S.W. 176 ST.

VEHICULAR CIRCULATION PLAN

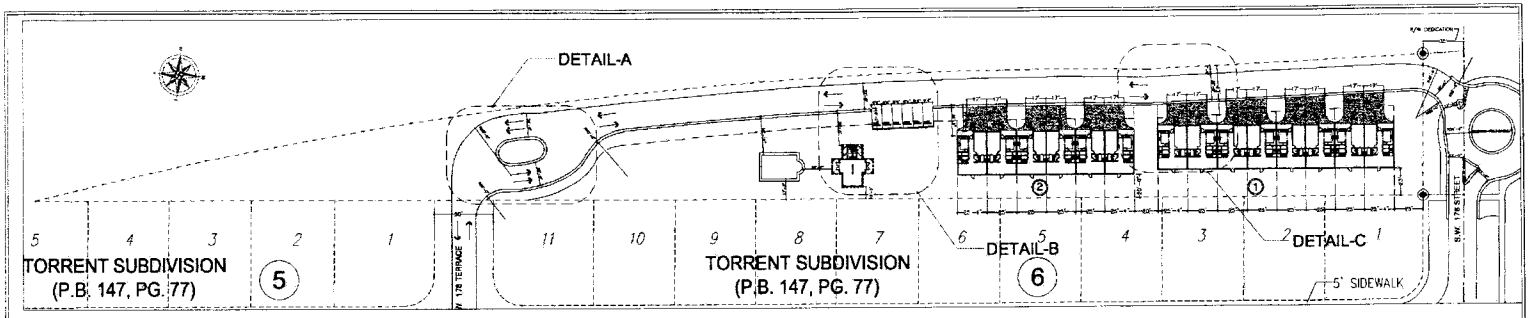

STREET DETAILS

1"=50'

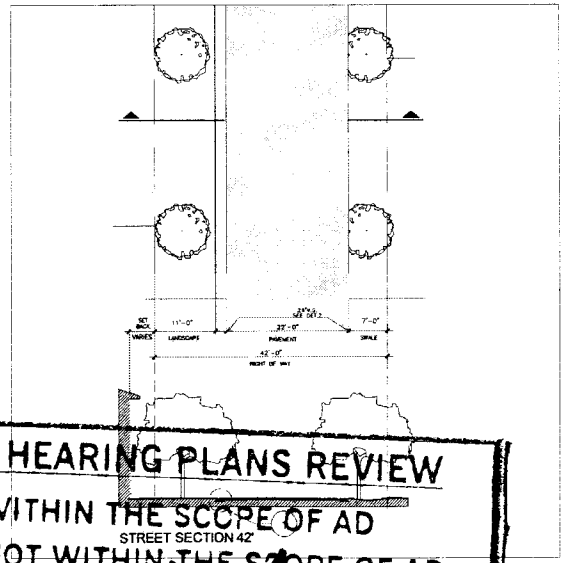

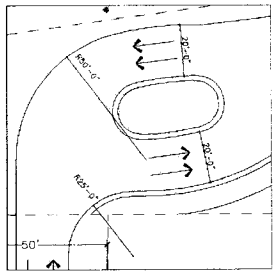

DETAIL-A

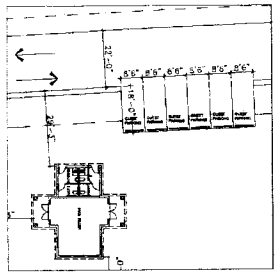

DETAIL-B

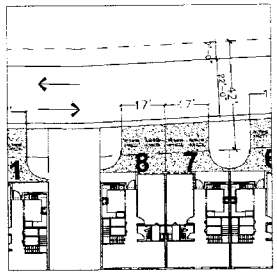

DETAIL-C

NOTE: SAFE SIGHT TRIANGLE NOT REQUIRED ON SW 176th ST. OR 178 TH TERRACE AS PER Sec.33-11(c) (50 ft. or less ROW)

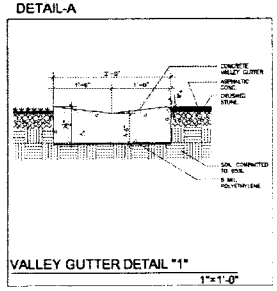

VALLEY GUTTER DETAIL "1"

1"=1'-0"

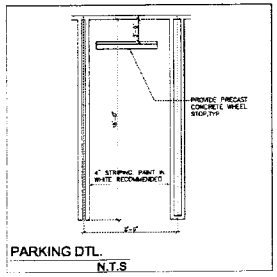

PARKING DTL.

N.T.S

Revisions

MARTIN A. D. YABOR AIA, NCARB

COPYRIGHT 2005 ALL RIGHTS RESERVED. THESE DRAWINGS AND SPECIFICATIONS ARE INSTRUMENTS OF SERVICE AND SHALL REMAIN THE PROPERTY OF MARTIN A. DIAZ YABOR & ASSOC. WHETHER THE PROJECT FOR WHICH THEY WERE PREPARED IS EXECUTED OR NOT. THEY ARE NOT TO BE USED IN ANY MANNER OR OTHER PROJECTS OR EXTENSIONS TO THIS PROJECT EXCEPT BY AGREEMENT IN WRITING AND WITH THE APPROPRIATE COMPENSATION TO MARTIN A. DIAZ YABOR & ASSOC. REPRODUCTIONS OF DRAWINGS AND SPECIFICATIONS WITHOUT THE WRITTEN CONSENT OF MARTIN A. DIAZ YABOR & ASSOC. IS PROHIBITED. CONTRACTOR IS RESPONSIBLE FOR VERIFYING ALL SITE CONDITIONS PRIOR TO PROCEEDING WITH WORK.

MP-5

Schematic Design

ZONING HEARING PLANS REVIEW

☒ PLANS WITHIN THE SCOPE OF AD

☐ PLANS NOT WITHIN THE SCOPE OF AD

REVIEWED BY: JFH

ON: 8/21/06

☐ ZONING EVALUATOR

☒ PLANS ACCEPTABLE

☐ NOT ACCEPTABLE

By: [signature] 8/21/06

ARCHITECTS PLANNERS INTERIORS

MARTIN A.D. YABOR & ASSOC., INC.

AA 0002791

12124 S.W. 131 AVENUE MIAMI, FLORIDA 33186

Rev#3

RECEIVED

206-003

AUG 21 2006

ZONING HEARINGS SECTION

MIAMI-DADE PLANNING AND ZONING DEPT.

BY JFH

EUREKA COVE LLC

At S.W. 178 Terrace and S.W. 176 ST.

TH - FLOORPLANS (8 UNIT BUILDING)

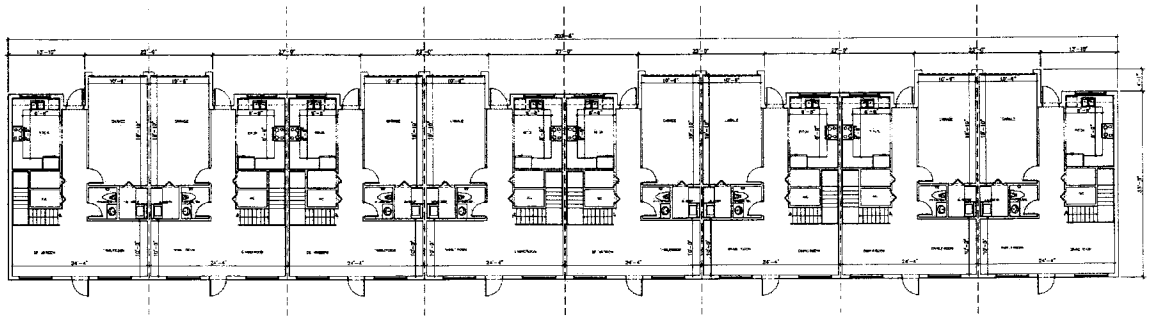

FIRST FLOOR TYPICAL

SCALE: 3/32"=1'-0

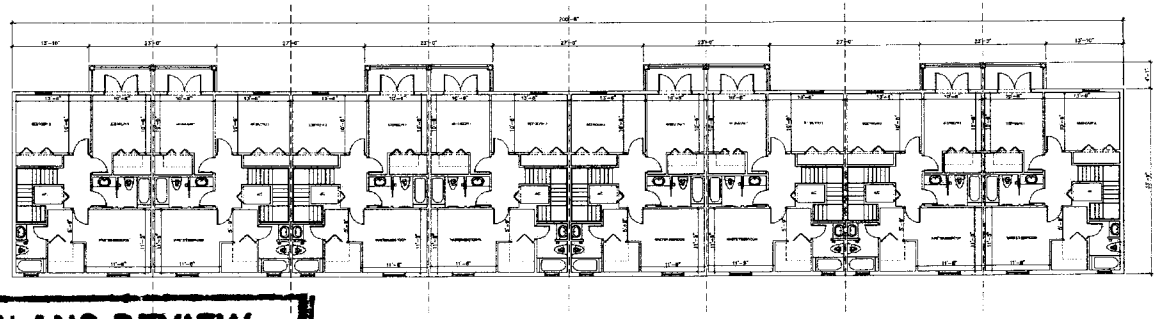

SECOND FLOOR TYPICAL

SCALE: 3/32"=1'-0

Revisions

MARTIN A. D. YABOR AIA, NCARB

Lic. # AR0015332

COPYRIGHT 2005 ALL RIGHTS RESERVED. THESE DRAWINGS AND SPECIFICATIONS ARE INSTRUMENTS OF SERVICE AND SHALL REMAIN THE PROPERTY OF MARTIN A. DAC YABOR & ASSOC. WHETHER THE PROJECT FOR WHICH THEY WERE PREPARED IS EXECUTED OR NOT. THEY ARE NOT TO BE USED IN ANY MANNER OR OTHER PROJECTS OR EXTENSIONS TO THIS PROJECT EXCEPT BY AGREEMENT IN WRITING AND WITH THE APPROPRIATE COMPENSATION TO MARTIN A. DAC YABOR & ASSOC. REPRODUCTIONS OF DRAWINGS AND SPECIFICATIONS WITHOUT THE WRITTEN CONSENT OF MARTIN A. DAC YABOR & ASSOC. IS PROHIBITED. CONTRACTOR IS RESPONSIBLE FOR VERIFYING ALL SITE CONDITIONS PRIOR TO PROCEEDING WITH WORK.

MP-6

Schematic Design

ZONING HEARING PLANS REVIEW

☒ PLANS WITHIN THE SCOPE OF AD

☐ PLANS NOT WITHIN THE SCOPE OF AD

REVIEWED BY: JPH

DATE: 8/21/06

ZONING EVALUATOR

☒ PLANS ACCEPTABLE

☐ NOT ACCEPTABLE

By: 8/21/06

MARTIN A.D. YABOR & ASSOC., INC.

AA 0002791

ARCHITECTS PLANNERS INTERIORS

1320 S.W. 107 AVENUE MIAMI, FLORIDA 33165

Rev#3

RECEIVED

206-003

AUG 21 2006

ZONING HEARINGS SECTION

MIAMI-DADE PLANNING AND ZONING DEPT.

BY JPH

EUREKA COVE LLC

At S.W. 178 Terrace and S.W. 176 ST.

ELEVATIONS - 8 UNIT TH BUILDING

FRONT ELEVATION

SCALE:3/32"=1'-0"

REAR ELEVATION

SCALE:3/32"=1'-0"

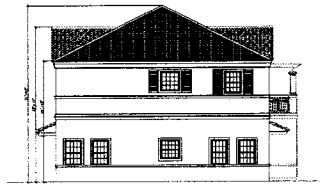

SIDE ELEVATION

SCALE:3/32"=1'-0"

Revisions

No	Date	Description

MARTIN A. D. YABOR AIA, NCARB

Lic. # AR0015352

COPYRIGHT 2005 ALL RIGHTS RESERVED. THESE DRAWINGS AND SPECIFICATIONS ARE INSTRUMENTS OF SERVICE AND SHALL REMAIN THE PROPERTY OF MARTIN A. DAB-YABOR & ASSOC. WHETHER THE PROJECT FOR WHICH THEY WERE PREPARED IS EXECUTED OR NOT. THEY ARE NOT TO BE USED IN ANY MANNER ON OTHER PROJECTS OR EXTENSIONS TO THIS PROJECT EXCEPT BY AGREEMENT IN WRITING AND WITH THE APPROPRIATE COMPENSATION TO MARTIN A. DAB-YABOR & ASSOC. REPRODUCTIONS OF DRAWINGS AND SPECIFICATIONS WITHOUT THE WRITTEN CONSENT OF MARTIN A. DAB-YABOR & ASSOC. IS PROHIBITED. CONTRACTOR IS RESPONSIBLE FOR VERIFYING ALL SITE CONDITIONS PRIOR TO PROCEEDING WITH WORK.

MP-7

Schematic Design

ZONING HEARING PLANS REVIEW

☒ PLANS WITHIN THE SCOPE OF AD

☐ PLANS NOT WITHIN THE SCOPE OF AD

REVIEWED BY: JFH

ON: 8/21/06

ZONING EVALUATOR

☒ PLANS ACCEPTABLE

☐ NOT ACCEPTABLE

By: 8/21/06

MARTIN A.D. YABOR & ASSOC., INC. AA 0002791

ARCHITECTS PLANNERS INTERIORS

12121 S.W. 131 AVENUE MIAMI, FLORIDA 33186

Rev#3

RECEIVED

206-003

AUG 21 2006

ZONING HEARINGS SECTION

MIAMI-DADE PLANNING AND ZONING DEPT

BY JFH

EUREKA COVE LLC

At S.W. 178 Terrace and S.W. 176 ST.

FLOORPLANS - 6 UNIT TH BUILDING

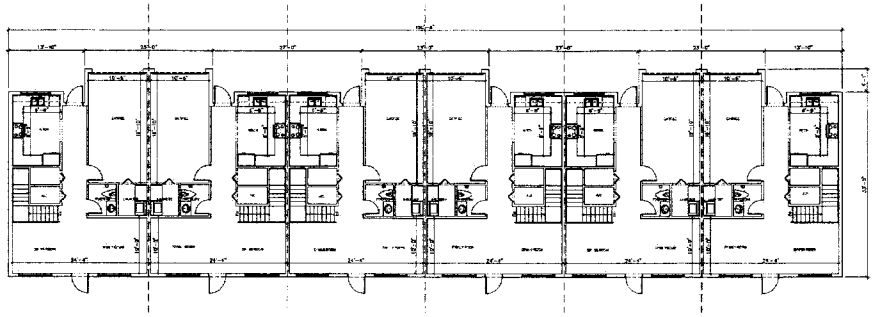

FIRST FLOOR TYPICAL

SCALE: 3/32"=1'-0

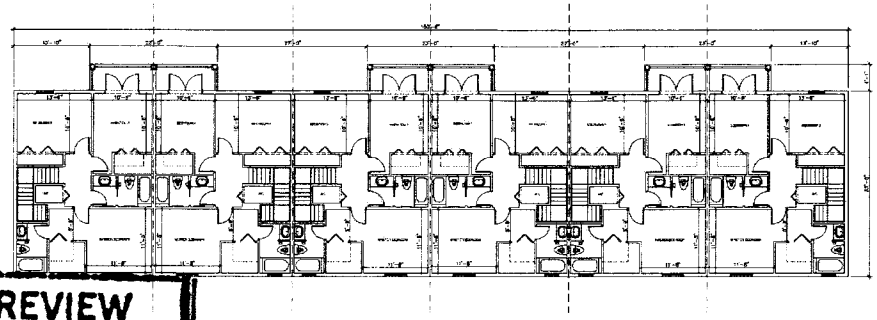

SECOND FLOOR TYPICAL

SCALE: 3/32"=1'-0

Revisions

No.	Date	Description

MARTIN A. D. YABOR AIA, NCARB

Lic. # AR0015222

COPYRIGHT 2005 ALL RIGHTS RESERVED. THESE DRAWINGS AND SPECIFICATIONS ARE INSTRUMENTS OF SERVICE AND SHALL REMAIN THE PROPERTY OF MARTIN A. DAZ YABOR & ASSOC. WHETHER THE PROJECT FOR WHICH THEY WERE PREPARED IS EXECUTED OR NOT, THEY ARE NOT TO BE USED IN ANY MANNER ON OTHER PROJECTS OR EXTENSIONS TO THIS PROJECT EXCEPT BY AGREEMENT IN WRITING AND WITH THE APPROPRIATE COMPENSATION TO MARTIN A. DAZ YABOR & ASSOC. REPRODUCTIONS OF DRAWINGS AND SPECIFICATIONS WITHOUT THE WRITTEN CONSENT OF MARTIN A. DAZ YABOR & ASSOC. IS PROHIBITED. CONTRACTOR IS RESPONSIBLE FOR VERIFYING ALL SITE CONDITIONS PRIOR TO PROCEEDING WITH WORK.

MP-8

Schematic Design

ZONING HEARING PLANS REVIEW

☒ PLANS WITHIN THE SCOPE OF AD

☐ PLANS NOT WITHIN THE SCOPE OF AD

REVIEWED BY: JSH

ON: 8/21/06

☐ ZONING EVALUATOR

☒ PLANS ACCEPTABLE

☐ NOT ACCEPTABLE

By: [signature] 8/21/06

ARCHITECTS PLANNERS INTERIORS

MARTIN A.D. YABOR & ASSOC., INC.

AA 0002791

12124 S.W. 131 AVENUE MIAMI, FLORIDA 33186

Rev#3

RECEIVED

206-003

AUG 21 2006

ZONING HEARINGS SECTION

MIAMI-DADE PLANNING AND ZONING DEPT.

BY JSH

EUREKA COVE LLC

At S.W. 178 Terrace and S.W. 176 ST.

ELEVATIONS - 6 UNIT TH BUILDING

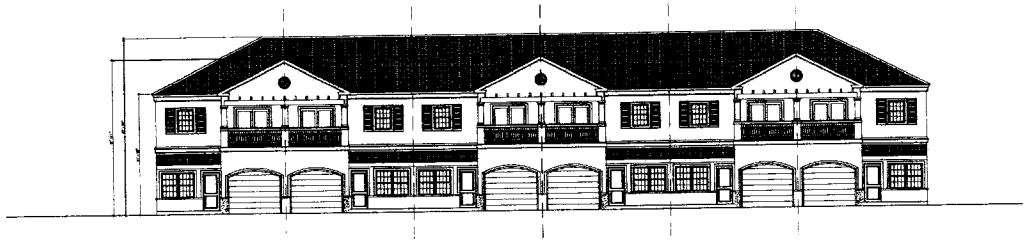

FRONT ELEVATION

SCALE:3/32"=1'-0"

REAR ELEVATION

SCALE:3/32"=1'-0"

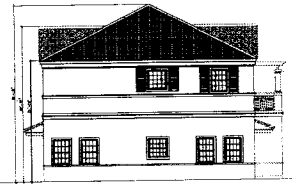

SIDE ELEVATION

SCALE:3/32"=1'-0"

Revisions

No	Date	Description

MARTIN A. D. YABOR AIA, NCARB

Lic. # AR0015332

COPYRIGHT 2005 ALL RIGHTS RESERVED. THESE DRAWINGS AND SPECIFICATIONS ARE INSTRUMENTS OF SERVICE AND SHALL REMAIN THE PROPERTY OF MARTIN A. DAB YABOR & ASSOC., WHETHER THE PROJECT FOR WHICH THEY WERE PREPARED IS EXECUTED OR NOT. THEY ARE NOT TO BE USED IN ANY MANNER ON OTHER PROJECTS OR EXTENSIONS TO THIS PROJECT EXCEPT BY AGREEMENT IN WRITING AND WITH THE APPROPRIATE COMPENSATION TO MARTIN A. DAB YABOR & ASSOC. REPRODUCTIONS OF DRAWINGS AND SPECIFICATIONS WITHOUT THE WRITTEN CONSENT OF MARTIN A. DAB YABOR & ASSOC. IS PROHIBITED. CONTRACTOR IS RESPONSIBLE FOR VERIFYING ALL SITE CONDITIONS PRIOR TO PROCEEDING WITH WORK.

MP-9

Schematic Design

ZONING HEARING PLANS REVIEW

☒ PLANS WITHIN THE SCOPE OF AD

☐ PLANS NOT WITHIN THE SCOPE OF AD

REVIEWED BY: JRA

Date: 8/21/06

ZONING EVALUATOR

☒ PLANS ACCEPTABLE

☐ NOT ACCEPTABLE

By: 2/21/06

MARTIN A.D. YABOR & ASSOC., INC.

AA 0002791

ARCHITECTS PLANNERS INTERIORS

Rev#3

RECEIVED

206-003

AUG 21 2006

ZONING HEARINGS SECTION

MIAMI-DADE PLANNING AND ZONING DEPT.

BY JRA