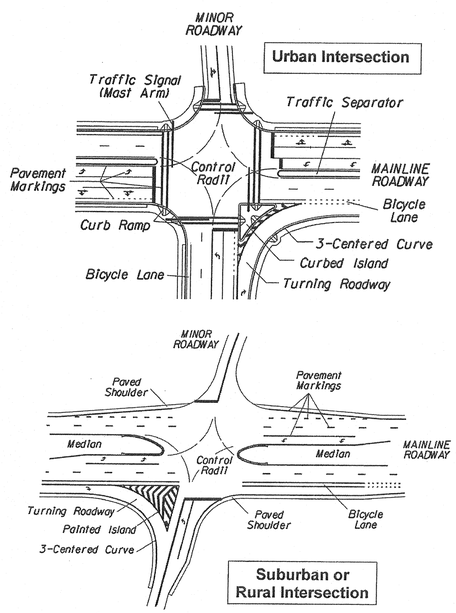

Figure 2-4. Typical Layout for an Urban and Rural Intersection.

01 FLORIDA DEPARTMENT OF TRANSPORTATION TYPICAL INTERSECTION LAYOUTS. DESIGN BASIS FOR NEW STREET INTERSECTION OF SW 97TH AVENUE AND SW152ND STREET

NOT TO SCALE

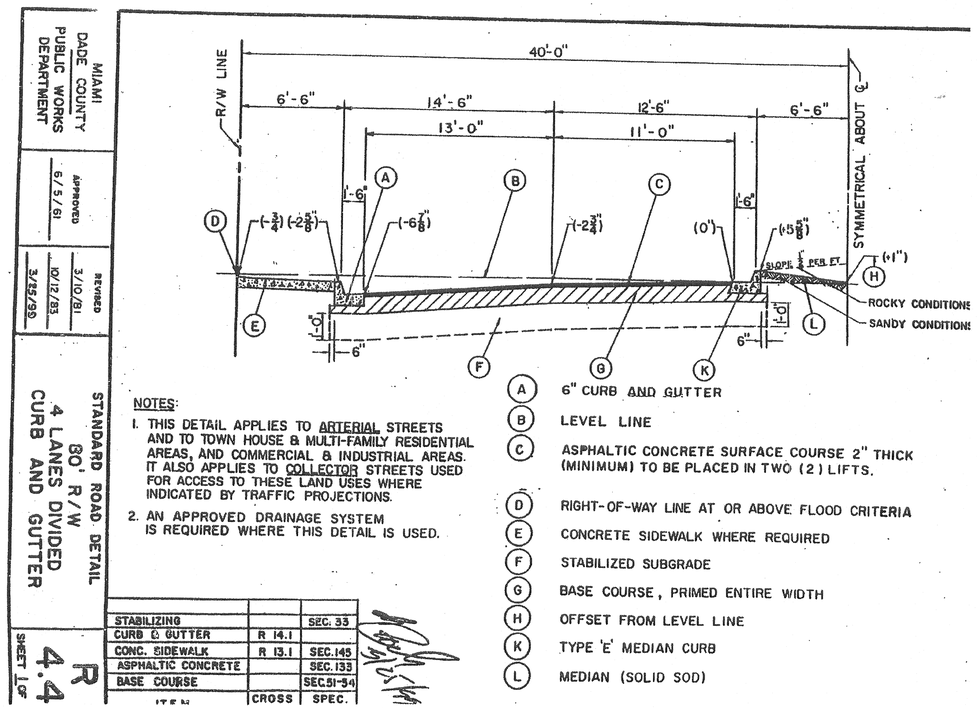

02 MIAMI-DADE COUNTY STANDARD ROAD SECTION DESIGN BASIS FOR NEW STREET LIMITS OF SW 97TH AVENUE.

NOT TO SCALE

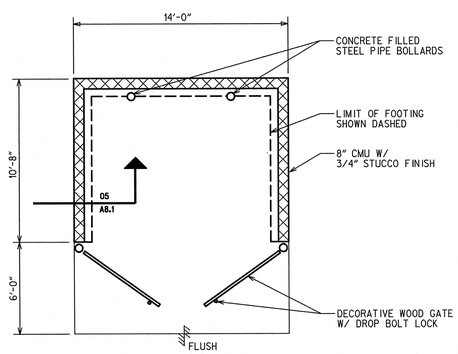

06 PLAN @ DUMPSTER ENCLOSURE

NOT TO SCALE

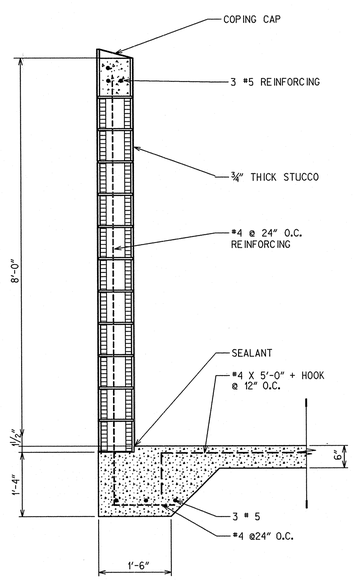

05 SECTION @ DUMPSTER ENCLOSURE

NOT TO SCALE

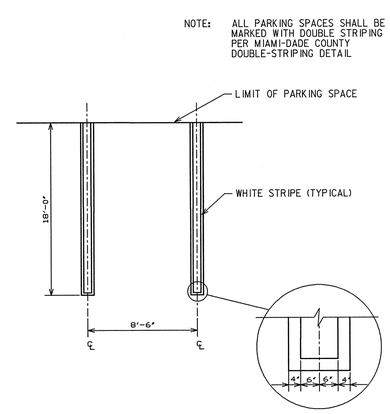

04 MIAMI-DADE COUNTY DOUBLE -STRIPING PARKING SPACE DETAIL

NOT TO SCALE

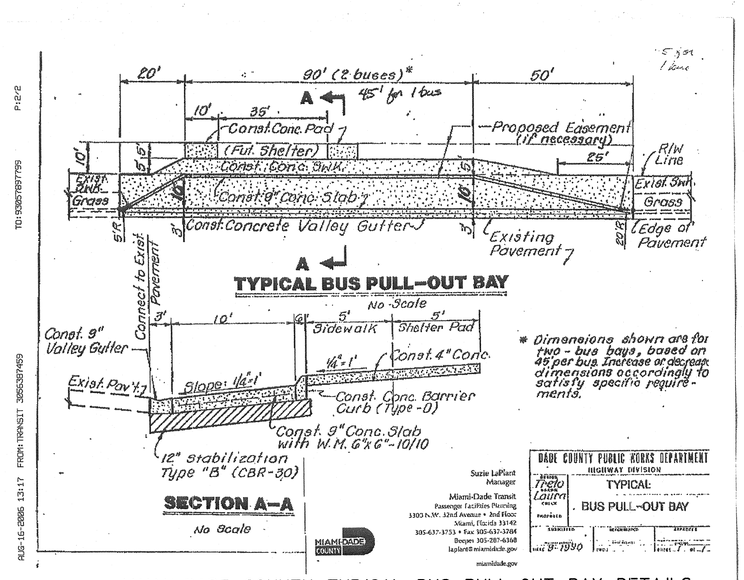

03 MIAMI-DADE COUNTY TYPICAL BUS PULL-OUT BAY DETAILS DESIGN BASIS FOR NEW BUS PULL-OUT BAY ON SW152ND STREET

NOT TO SCALE

G S & P

Design Services For The Built Environment

Nashville Fort Lauderdale
Louisville Tampa Charlotte
Jacksonville Indianapolis
Dallas Columbus Atlanta
Richmond Birmingham

GRESHAM SMITH AND PARTNERS

6030 Hollywood Blvd.
Suite 210
Hollywood, Florida 33024
Phone: 954-981-9100
Fax: 954-981-9164
WWW.GSPNET.COM

Firm Certification Numbers
AAF000034/EB00003086

CONSULTANTS:

THE MEDICAL PLAZA AT CORAL REEF

SEAL:

NO.	REVISION	DR.	DATE

SITE AND STREET DETAILS

A8.1

PROJECT: 24898.00
DATE: 09/08/2006