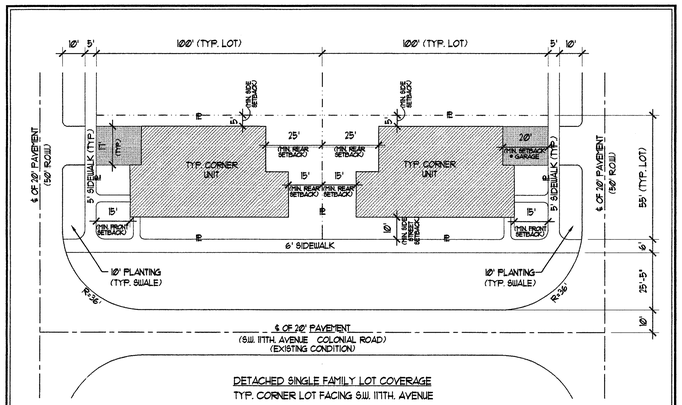

DETACHED SINGLE FAMILY LOT COVERAGE
TYP. CORNER LOT FACING S.W. 117TH. AVENUE

LOT SIZE : 55' x 100'	5,500 SQ. FT.	100 %
BUILDING FOOTPRINT (MAXIMUM)	2,200 SQ. FT.	40 % LOT COVERAGE

NOTE:
FOR SPECIFIC LOT CALCULATIONS SEE SHEETS A-6, A-7 & A-8

TYPICAL CORNER LOTS FACING S.W. 117TH. AVENUE

COLONIAL ROAD (EXISTING CONDITION SHOWN) SCALE: 1"=30'-0"

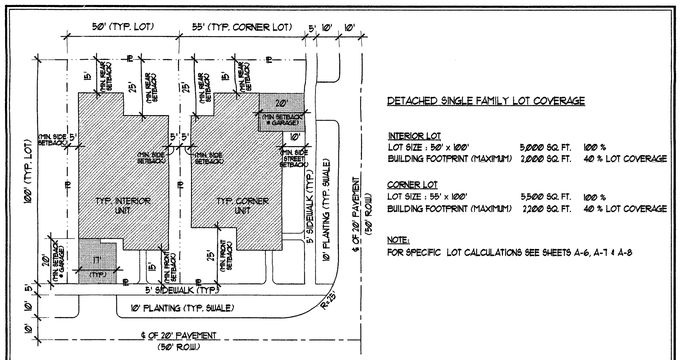

DETACHED SINGLE FAMILY LOT COVERAGE

INTERIOR LOT

LOT SIZE : 50' x 100'	5,000 SQ. FT.	100 %
BUILDING FOOTPRINT (MAXIMUM)	2,000 SQ. FT.	40 % LOT COVERAGE

CORNER LOT

LOT SIZE : 55' x 100'	5,500 SQ. FT.	100 %
BUILDING FOOTPRINT (MAXIMUM)	2,200 SQ. FT.	40 % LOT COVERAGE

NOTE:
FOR SPECIFIC LOT CALCULATIONS SEE SHEETS A-6, A-7 & A-8

TYPICAL LOTS DETACHED SINGLE FAMILY

SCALE: 1"=30'-0"

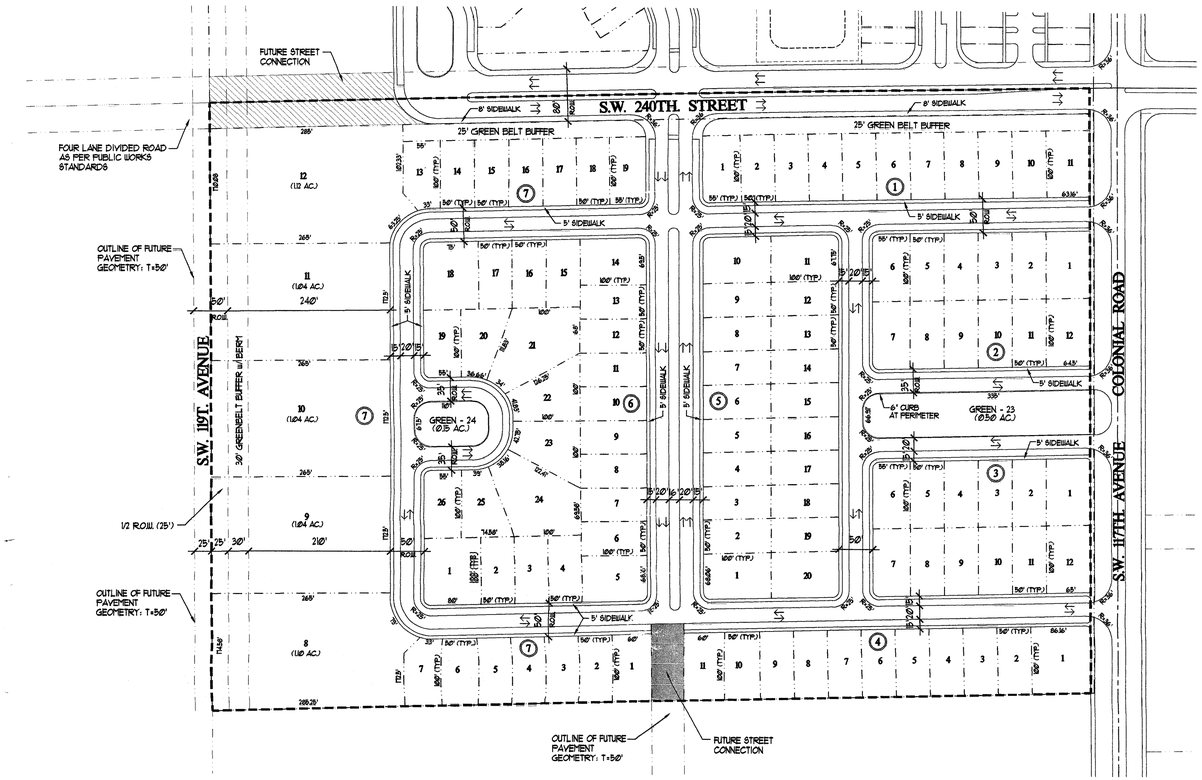

PARCEL 2-H

SCALE: 1"=100'-0"

SEE DETAILS & CALCULATIONS OF TYPICAL DETACHED SINGLE FAMILY LOTS AT SHEETS A-6, A-7 & A-8

GENERAL SITE DATA
PARCEL 2-H
DETACHED SINGLE FAMILY
RU-1M (A)

1. INTENDED USE OF DEVELOPMENT	DETACHED SINGLE FAMILY 50' X 100' MINIMUM LOTS DETACHED SINGLE FAMILY 112.5' X 265' (1 AC. LOTS)		
2. NET ACREAGE OF SITE (EXCLUDING R.O.W. DEDICATION)	25.37 ACRES	----------	100.00%
3. TOTAL UNITS (50'x100' = 106 UNITS / 1 ACRE = 5 UNITS) --111 UNITS (MAX. BLDG. GROUND COVERAGE 7.04 ACRES 27.74%)	17.6 ACRES	--------	69.37%
4. PAVED AREAS INCLUDING SIDEWALKS	5.45 ACRES	--------	21.48 %

N

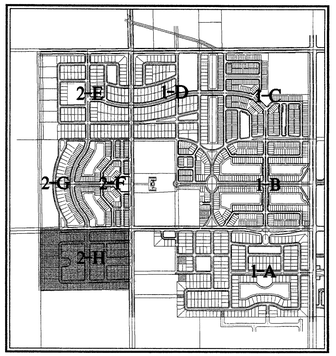

KEY PLAN

SCALE: N.T.S.

SILVER PALM PARCEL 2-H
LEGAL DESCRIPTION

The North 902.55 feet of the NE ¼ of the SE ¼ in Section 24, Township 56 South, Range 39 East, Less the East 35 feet thereof, lying and being in Miami-Dade County, Florida.

NOTE: The above described parcel contains 1,178,496 square feet (27.0545 acres), more or less.

SCALE:	AS SHOWN
CHECKED BY:	M.M.M.
DRAWN BY:	Y.J.F.
DATE:	12-06-02
JOB:	0216
6 11-18-03	Y.J.F.

REVISIONS	BY
1 04-25-03	Y.J.F.
2 05-07-03	Y.J.F.
3 05-20-03	L.T.E.
4 06-18-03	Y.J.F.
5 07-01-03	Y.J.F.

LENNAR HOMES
760 N.W. 107 AVENUE MIAMI, FLORIDA, 33172 (305) 599-1951

OLIVA-MEOZ ARCHITECTS & PLANNERS, INC.
8240 SOUTHWEST 24TH STREET MIAMI, FLORIDA 33155
TELEPHONE: (305) 552-7296. FACSIMILE: (305) 552-7297.

SILVER PALM
DADE-COUNTY, FLORIDA

CAD FILE: 0216/SP-9

NOV 16 2003

HECTOR L. OLIVA
AR 0015339

PARCEL 2-H
SHEET
SP-9

THE DESIGNERS HEREBY EXPRESSLY RESERVE THEIR OWNERSHIP AND PROPERTY RIGHTS IN THESE PLANS AND DRAWINGS ARE NOT TO BE REPRODUCED, CHANGED, OR COPIED IN ANY FORM OR MANNER WHATSOEVER WITHOUT FIRST OBTAINING WRITTEN PERMISSION AND CONSENT OF OLIVA-MEOZ, ARCHITECTS & PLANNERS, INC. NOR ARE THEY TO BE ASSIGNED TO ANY PARTY WITHOUT FIRST OBTAINING SAID WRITTEN PERMISSION AND CONSENT.

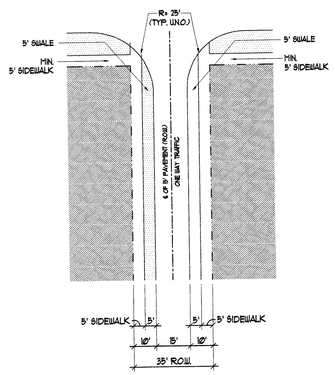

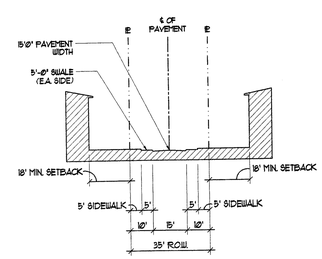

T = 35' R.O.W.
Private Road
(One Way Traffic)

Attached Single Family

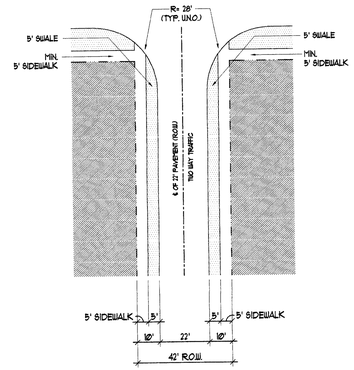

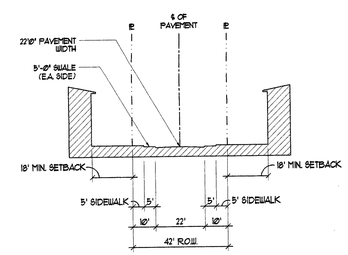

T = 42' R.O.W.
Private Road
(Two Way Traffic)

Attached Single Family

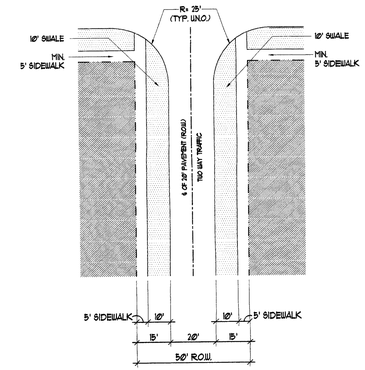

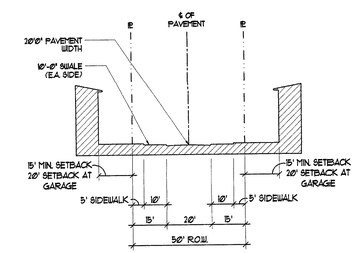

T = 50' R.O.W.
Typical Road
(Two Way Traffic)

Detached Single Family

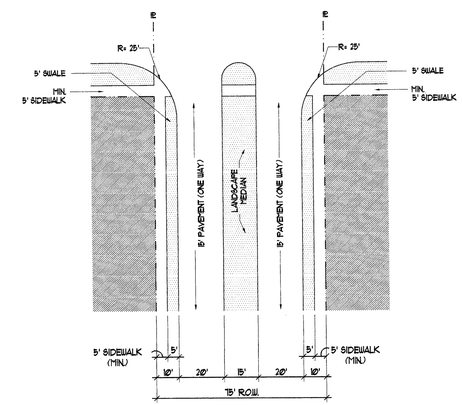

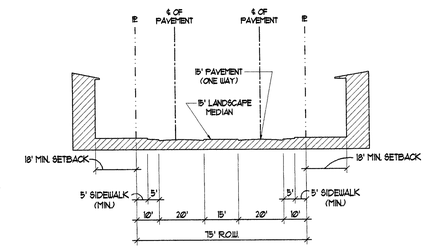

T = 75' R.O.W.
Interior Boulevard

LEGEND

PROPERTY

GRASSED AREAS

MAY 20 2003

SCALE:	30'=1'-0"
CHECKED BY:	M.M.M.
DRAWN BY:	Y.J.F.
DATE:	12-06-02
JOB:	0216

REVISIONS	BY
1 04-25-03	L.T.F.

LENNAR HOMES
760 N.W. 107 AVENUE MIAMI, FLORIDA 33172 (305) 599-1951

OLIVA-MEOZ ARCHITECTS & PLANNERS, INC.
8240 SOUTHWEST 24TH STREET MIAMI, FLORIDA 33155
TELEPHONE: (305) 552-7296. FACSIMILE: (305) 552-7297.

SILVER PALM
DADE COUNTY, FLORIDA
CAD FILE: F:\0216\SP-10

HECTOR L. OLIVA
AR 0015339

SHEET
SP-10

THE DESIGNERS HEREBY EXPRESSLY RESERVE THEIR COPYRIGHT AND PROPERTY RIGHTS IN THESE PLANS AND DRAWINGS ARE NOT TO BE REPRODUCED, CHANGED, OR COPIED IN ANY FORM OR MANNER WHATSOEVER WITHOUT FIRST OBTAINING WRITTEN PERMISSION AND CONSENT OF OLIVA-MEOZ, ARCHITECTS & PLANNERS, INC. NOR ARE THEY TO BE ASSIGNED TO ANY PARTY WITHOUT FIRST OBTAINING SAID WRITTEN PERMISSION AND CONSENT.

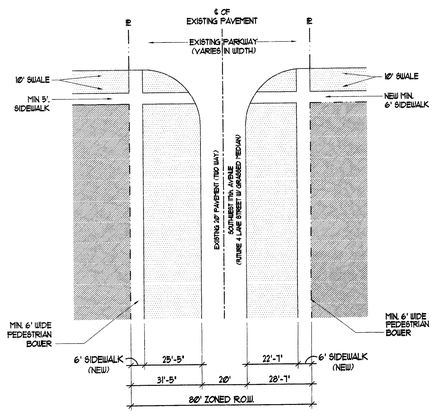

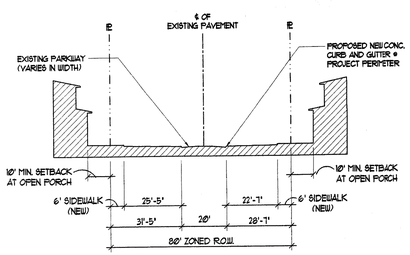

T = 80' R.O.W.
Existing Condition
Southwest 117th. Avenue
(Colonial Road)

NOTE:
Future 4 Lane Divided Arterial Road Geometry to be as per Public Works Standards.

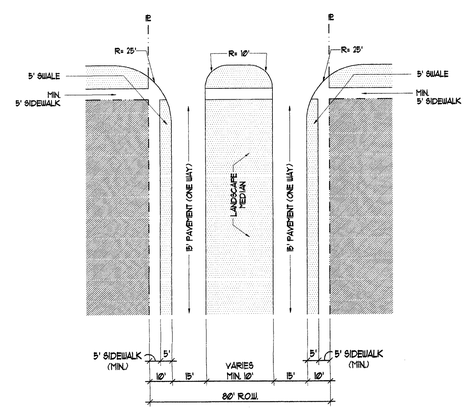

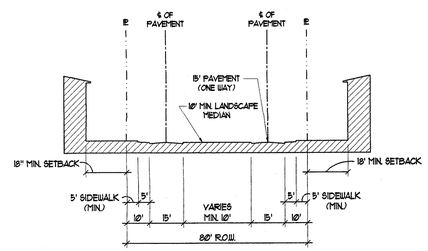

T = 80' R.O.W.
Interior Boulevard

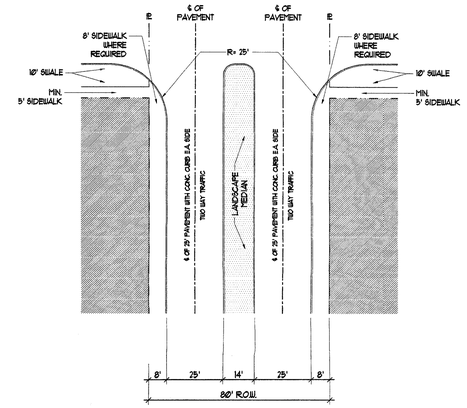

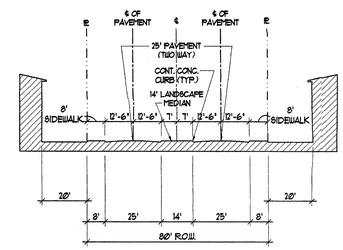

T = 80' R.O.W.
Standard Road (Typical)

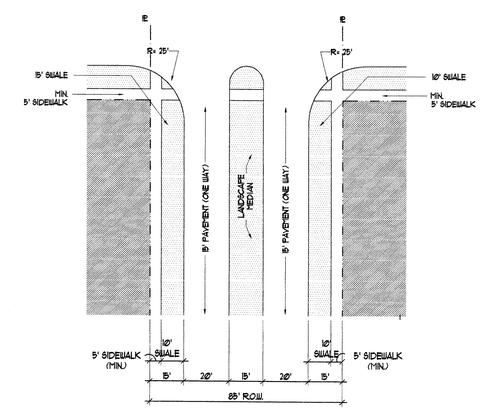

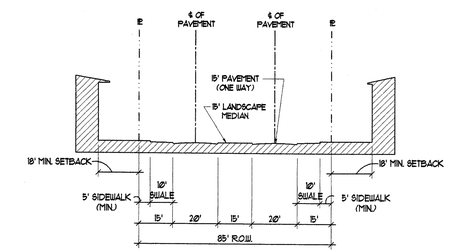

T = 85' R.O.W.
Main Entry Boulevard
(Silver Palm Boulevard)

LEGEND
- PROPERTY
- GRASSED AREAS

SCALE: 30'=1'-0"	REVISIONS	BY
CHECKED BY: M.M.M.	1 04-25-03	L.T.F.
DRAWN BY: Y.J.F.		
DATE:		
JOB: 0216		

LENNAR HOMES
760 N.W. 107 AVENUE MIAMI, FLORIDA 33172 (305) 599-1951

OLIVA-MEOZ ARCHITECTS & PLANNERS, INC.
8240 SOUTHWEST 24TH STREET MIAMI, FLORIDA 33155
TELEPHONE: (305) 552-7296. FACSIMILE: (305) 552-7297.

SILVER PALM
DADE COUNTY, FLORIDA
CAD FILE: F:\0216\SIP11

MAY 20 2003
HECTOR L. OLIVA
AR 0015339

SHEET
SP-11

THE DESIGNERS HEREBY EXPRESSLY RESERVE THEIR COPYRIGHT AND PROPERTY RIGHTS IN THESE PLANS AND DRAWINGS ARE NOT TO BE REPRODUCED, CHANGED, OR COPIED IN ANY FORM OR MANNER WHATSOEVER WITHOUT FIRST OBTAINING WRITTEN PERMISSION AND CONSENT OF OLIVA-MEOZ, ARCHITECTS & PLANNERS, INC. NOR ARE THEY TO BE ASSIGNED TO ANY PARTY WITHOUT FIRST OBTAINING SAID WRITTEN PERMISSION AND CONSENT.