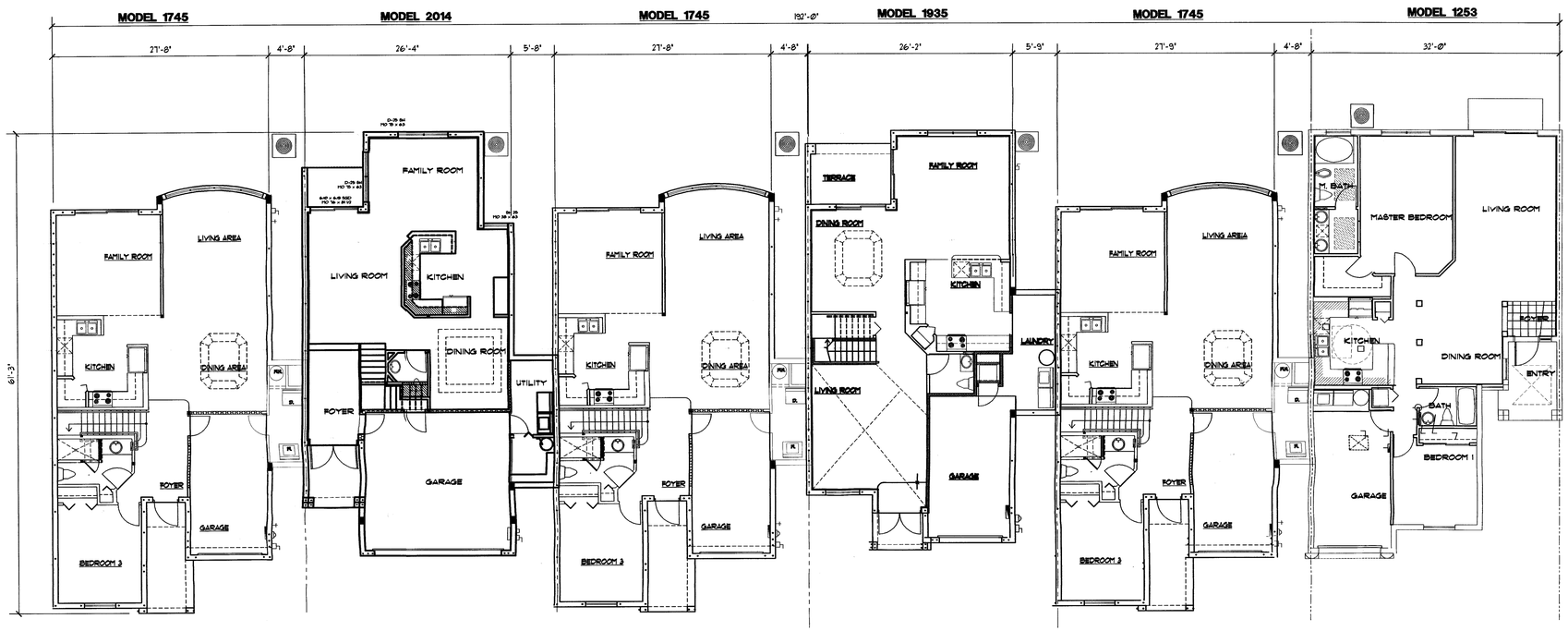

6 UNIT BUILDING OVERALL FLOORPLAN

REFER TO INDIVIDUAL PLANS FOR DIMENSIONS
BUILDING 31

RECEIVED
202-305
MAY 21 2004
ZONING HEARINGS SECTION
MIAMI-DADE PLANNING AND ZONING DEPT.
BY

ZONING HEARING PLANS REVIEW
☒ PLANS WITHIN THE SCOPE OF AD
☐ PLANS NOT WITHIN THE SCOPE OF AD
REVIEWED BY: Bob Parlem
ON: 5/21/04
ZONING EVALUATOR
☐ PLANS ACCEPTABLE
☐ NOT ACCEPTABLE
By: ____ / /

ISSUANCE FOR
☐ BIDDING ☐ CONSTRUCTION ☐ PERMIT
08/20/04
REV1 REV2 REV3 REV4
AFFIX SEAL HERE

Client: COTTAGES OF SILVER LAKES
Address:
Address:
Phone:
Plan: OVERALL FLOORPLAN
6 UNIT BUILDING

Job No:
Drawn By:
Scale: 1/8" = 1'-0"
Date: 05-10-2004
Lot:
Block:

EDWARD SILVA, ARCHITECT
REG. No. 0011131
8900 SW 117 AVE #B107, MIAMI, FLORIDA 33186
(305) 275-8383 / FAX - (305) 275-8381
E.S.A. Design Group, Inc.

A-2
of

DESIGN, DRAWINGS AND RELATED DOCUMENTS PREPARED BY E.S.A. DESIGN GROUP ARE INSTRUMENTS OF SERVICE FOR THE EXECUTION OF THE WORK AND ARE THE PROPERTY OF E.S.A. DESIGN GROUP WHETHER THE WORK IS EXECUTED OR NOT, AND E.S.A. DESIGN GROUP RESERVES COPYRIGHT THEREIN AND THEY ARE NOT TO BE USED WITHOUT PROPER COMPENSATION OR FOR ANY OTHER WORK WITHOUT THE PRIOR WRITTEN CONSENT OF E.S.A. DESIGN GROUP. REPRODUCTIONS OF DRAWINGS AND OR SPECIFICATIONS WITHOUT WRITTEN CONSENT IS PROHIBITED.

P:\cottages of silver palm\LEN CARBBEAN BLK-15 OV-FLOORPLAN.dwg, 05/20/04 05:51:56 PM, HP DesignJet 1050C by HP.pc3

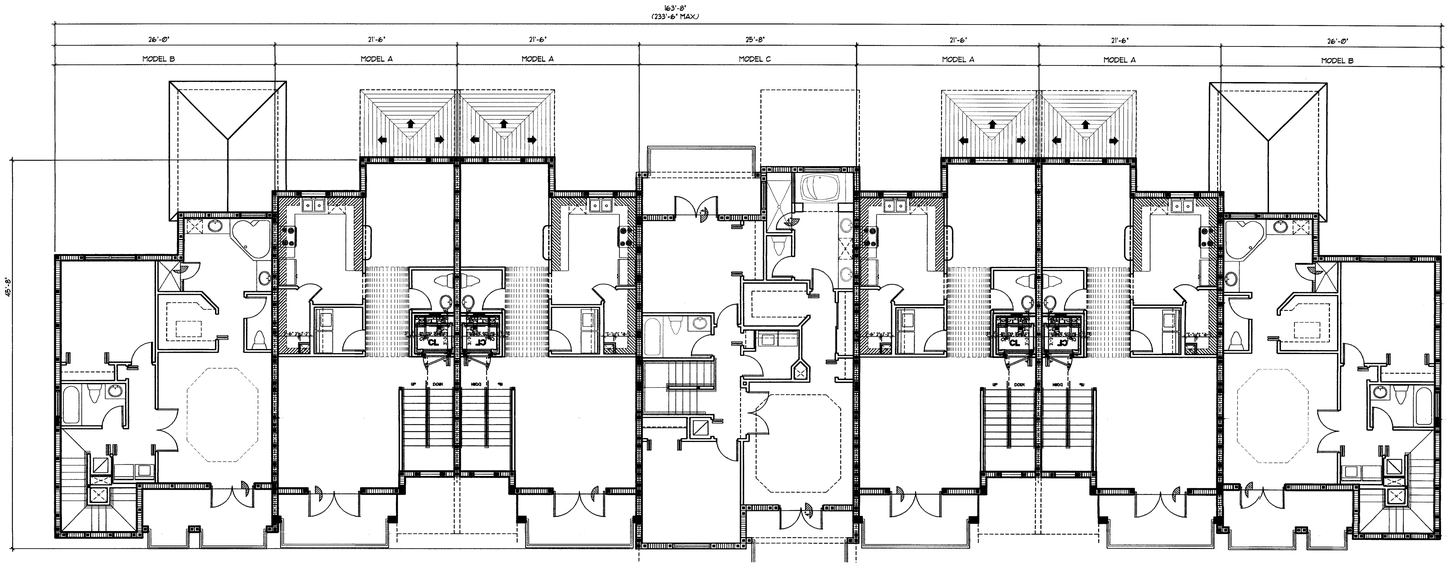

SECOND FLOOR PLAN

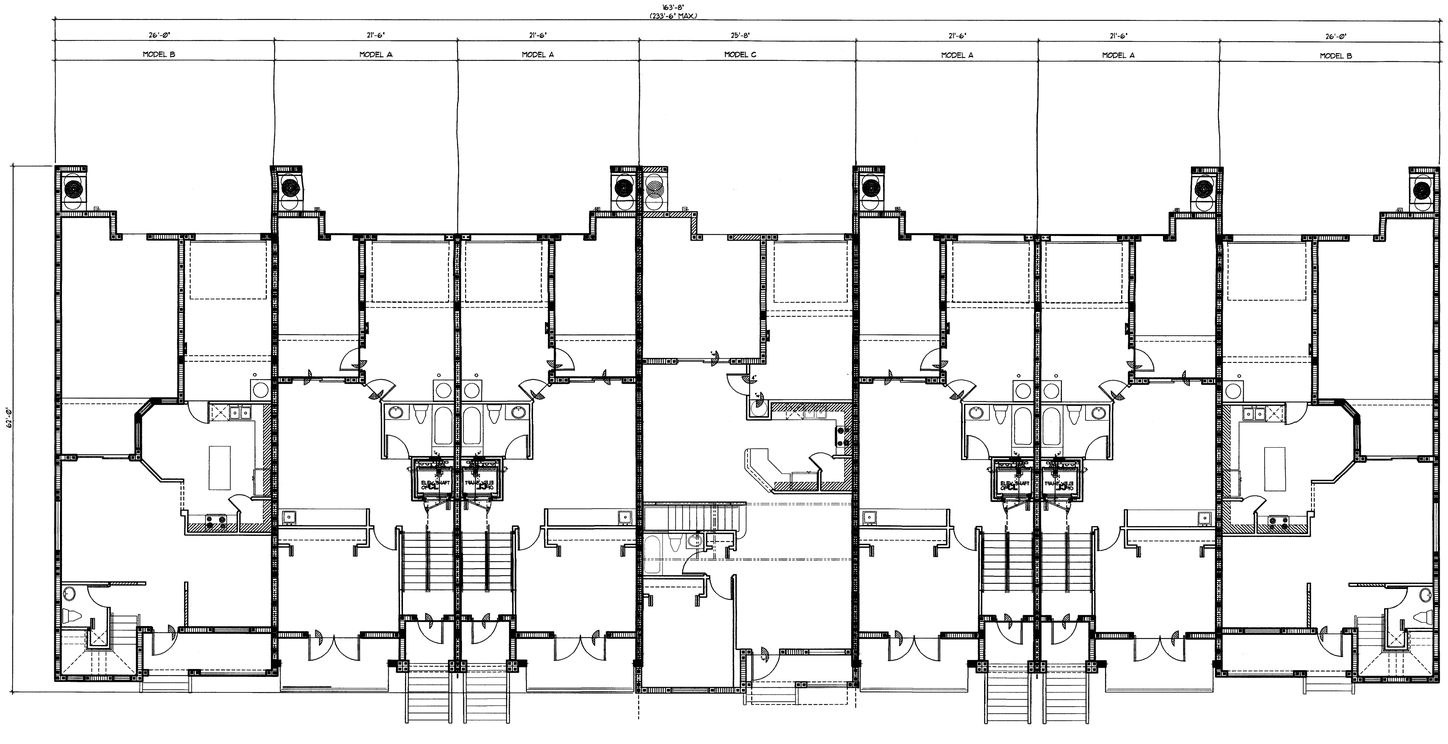

FIRST FLOOR PLAN

RECEIVED
2002-305
MAY 21 2004
ZONING HEARINGS SECTION
MIAMI-DADE PLANNING AND ZONING DEPT.
BY

ZONING HEARING PLANS REVIEW
☑ PLANS WITHIN THE SCOPE OF AD
☐ PLANS NOT WITHIN THE SCOPE OF AD
REVIEWED BY: Bob Cole
ON: 5/21/04
ZONING EVALUATOR
☑ PLANS ACCEPTABLE
☐ NOT ACCEPTABLE
BY: Bob Cole 5/21/04

ISSUANCE FOR
☐ BIDDING ☐ CONSTRUCTION ☐ PERMIT

REV1
REV2
REV3
REV4

AFFIX SEAL HERE

Client: COTTAGES OF SILVER LAKES
Address:
Address:
Phone:
Plan: FIRST FLOOR OVERALL PLAN
7 UNIT BUILDING

Job No.:
Drawn By:
Scale: 1/8" = 1'-0"
Date: 5-10-2004
Lot:
Block:

EDWARD SILVA, ARCHITECT
REG. No. 0011131
8900 SW 117 AVE #B107, MIAMI, FLORIDA 33186
(305) 275-8383 / FAX - (305) 275-8381

E.S.A. Design Group, Inc.

A-2
of

DESIGN, DRAWING, AND RELATED DOCUMENTS PREPARED BY E.S.A. DESIGN GROUP ARE INSTRUMENTS OF SERVICE FOR THE EXECUTION OF THE WORK AND ARE THE PROPERTY OF E.S.A. DESIGN GROUP WHETHER THE WORK BE EXECUTED OR NOT, AND E.S.A. DESIGN GROUP RESERVES COPYRIGHT THEREIN AND IN THE WORK THEREFROM AND THEY ARE NOT TO BE USED WITHOUT PROPER COMPENSATION OR FOR ANY OTHER WORK WITHOUT THE PRIOR WRITTEN CONSENT OF E.S.A. DESIGN GROUP. REPRODUCTIONS OF DRAWINGS AND OR SPECIFICATIONS WITHOUT WRITTEN CONSENT IS PROHIBITED.

\cottages of silver palm\BUILDING1.dwg, 05/20/04 05:58:25 PM, HP DesignJet 1050C by HP.pc3

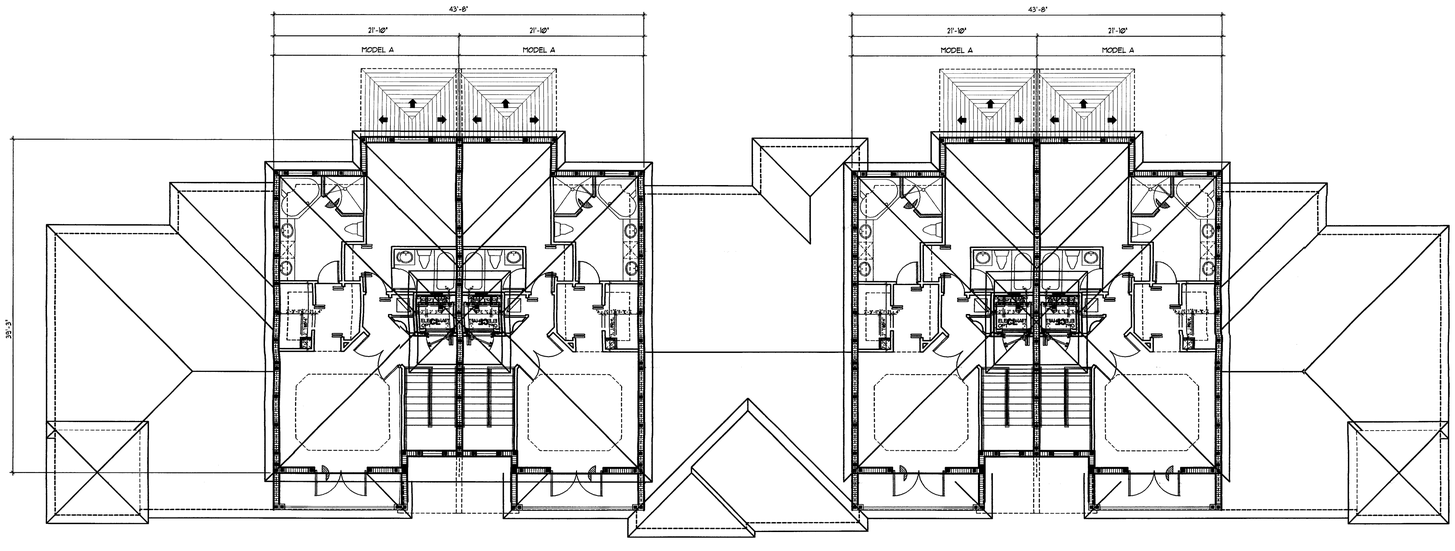

THIRD FLOOR PLAN

RECEIVED
262-305
MAY 21 2004
ZONING HEARINGS SECTION
MIAMI-DADE PLANNING AND ZONING DEPT.
BY DC

ZONING HEARING PLANS REVIEW
☑ PLANS WITHIN THE SCOPE OF AD
☐ PLANS NOT WITHIN THE SCOPE OF AD
REVIEWED BY: Bob Cole
ON: 5/21/04
ZONING EVALUATOR
☑ PLANS ACCEPTABLE
☐ NOT ACCEPTABLE
By: Bob Coleman 5/21/04

DESIGN, DRAWINGS AND RELATED DOCUMENTS PREPARED BY E.S.A. DESIGN GROUP ARE INSTRUMENTS OF SERVICE FOR THE EXECUTION OF THE WORK AND ARE THE PROPERTY OF E.S.A. DESIGN GROUP WHETHER THE WORK BE EXECUTED OR NOT. AND E.S.A. DESIGN GROUP RESERVES COPYRIGHT THEREIN AND IN THE WORK THEREFROM AND THEY ARE NOT TO BE USED WITHOUT PROPER COMPENSATION OR FOR ANY OTHER WORK WITHOUT THE PRIOR WRITTEN CONSENT OF E.S.A. DESIGN GROUP. REPRODUCTIONS OF DRAWINGS AND OR SPECIFICATIONS WITHOUT WRITTEN CONSENT IS PROHIBITED.

ISSUANCE FOR
☐ BIDDING ☐ CONSTRUCTION ☐ PERMIT

REV1
REV2
REV3
REV4

AFFIX SEAL HERE

Client: COTTAGES OF SILVER LAKES
Address:
Address:
Phone:
Plan: THIRD FLOOR/ROOF OVERALL PLAN
7 UNIT BUILDING

Job No.:
Drawn By:
Scale: 1/8" = 1'-0"
Date: 5-10-2004
Lot:
Block:

EDWARD SILVA, ARCHITECT
REG. No. 0011131
8900 SW 117 AVE #B107, MIAMI, FLORIDA 33186
(305) 275-8383 / FAX - (305) 275-8381
E.S.A. Design Group, Inc.

A-3
of

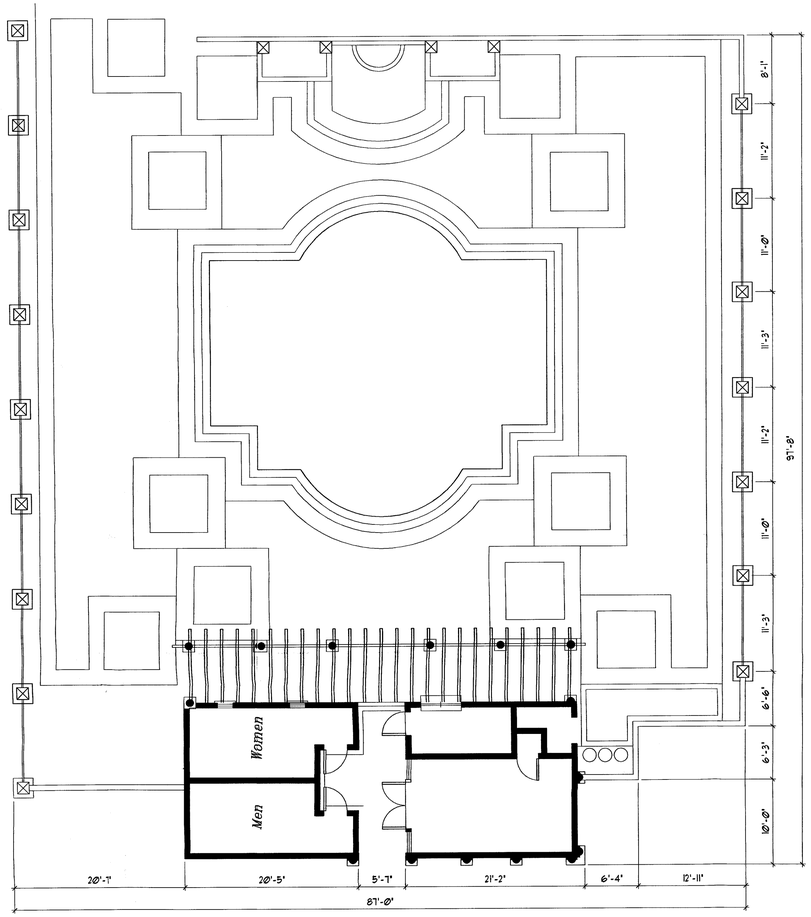

FLOOR PLAN
RECREATION CENTER

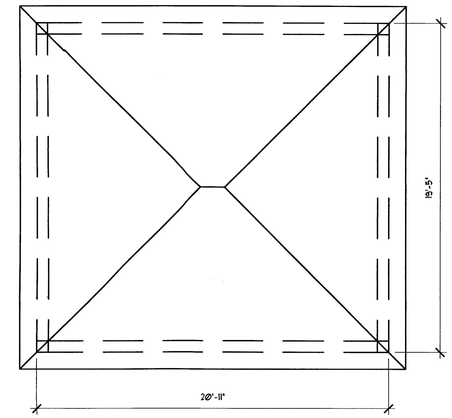

GAZEBO. FLOOR PLAN

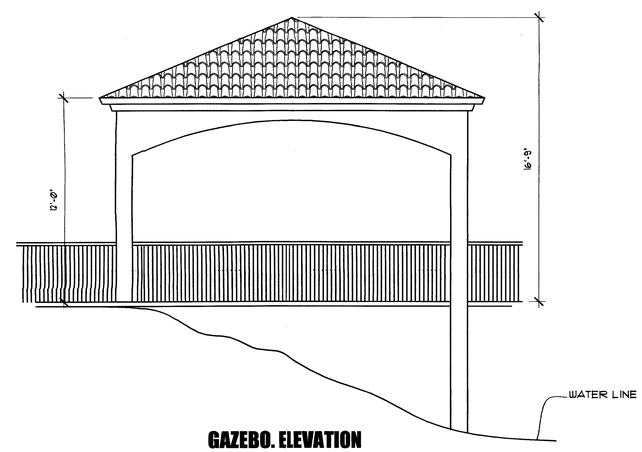

GAZEBO. ELEVATION

RECEIVED
MAY 21 2004
ZONING HEARINGS SECTION
MIAMI-DADE PLANNING AND ZONING DEPT.
BY

ZONING HEARING PLANS REVIEW
☑ PLANS WITHIN THE SCOPE OF AD
☐ PLANS NOT WITHIN THE SCOPE OF AD
REVIEWED BY: Bob Cole
ON: 5/21/04
ZONING EVALUATOR
☐ PLANS ACCEPTABLE
☐ NOT ACCEPTABLE
By:

ISSUANCE FOR
☐ BIDDING ☐ CONSTRUCTION ☐ PERMIT

REV1 REV2 REV3 REV4
AFFIX SEAL HERE

Client: COTTAGES OF SILVER LAKES
Address: 102 AVE & SW 232ND STREET
Address: MIAMI, FLORIDA
Phone: 305-577-0909
Plan: GAZEBO AND RECREATIONAL CENTER

Job No.:
Drawn By:
Scale: 3/16" = 1'-0"
Date: 05-10-2004
Lot:
Block:

EDWARD SILVA, ARCHITECT
REG. No. 0011131
8900 SW 117 AVE #B107, MIAMI, FLORIDA 33186
(305) 275-8383 / FAX - (305) 275-8381
E.S.A. Design Group, Inc.

A-1.1
of

DESIGNS, DRAWINGS AND RELATED DOCUMENTS PREPARED BY E.S.A. DESIGN GROUP ARE INSTRUMENTS OF SERVICE FOR THE EXECUTION OF THE WORK AND ARE THE PROPERTY OF E.S.A. DESIGN GROUP WHETHER THE WORK BE EXECUTED OR NOT, AND E.S.A. DESIGN GROUP RESERVES COPYRIGHT THEREIN AND IN THE WORK THEREFROM AND THEY ARE NOT TO BE USED WITHOUT PROPER COMPENSATION OR FOR ANY OTHER WORK WITHOUT THE PRIOR WRITTEN CONSENT OF E.S.A. DESIGN GROUP. REPRODUCTIONS OF DRAWINGS AND OR SPECIFICATIONS WITHOUT WRITTEN CONSENT IS PROHIBITED.

P:\cottages of silver palm\GAZEBO.dwg, 05/20/04 05:38:30 PM, HP DesignJet 1050C by HIP.pc3