G.C. HOMES, INCORPORATED
OWNER - DEVELOPER
14425 COUNTRY WALK DRIVE MIAMI, FLORIDA

SUMMERVILLE

GOULDS, MIAMI - DADE COUNTY, FLORIDA

STREET TYPES AND STREET SECTIONS

ROSELLO BALBOA + LORDI
ARCHITECTURE & TOWN PLANNING
13370 SOUTHWEST 131ST STREET SUITE 104 MIAMI, FLORIDA 33186
TELEPHONE: 786.293.2313 FACSIMILE: 786.293.2344 MAIL@RBLARCHITECTURE.COM

T = 24'
Carriage Lane
(One Way Traffic)

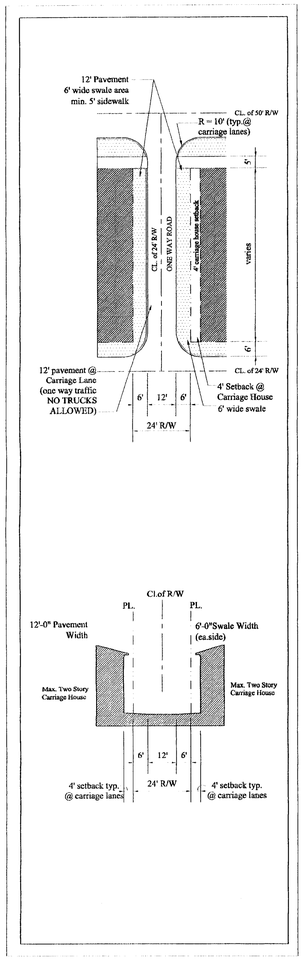

T = 50'
Minor Road
(Two Way Traffic)

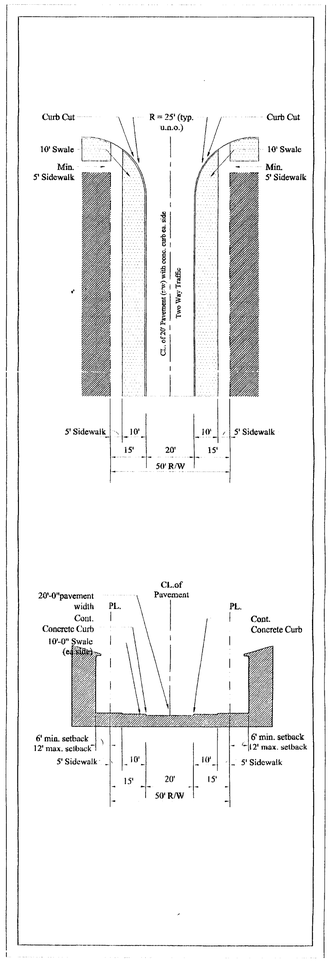

T = 50'P (Modified)
Minor Road w/
Parallel Parking

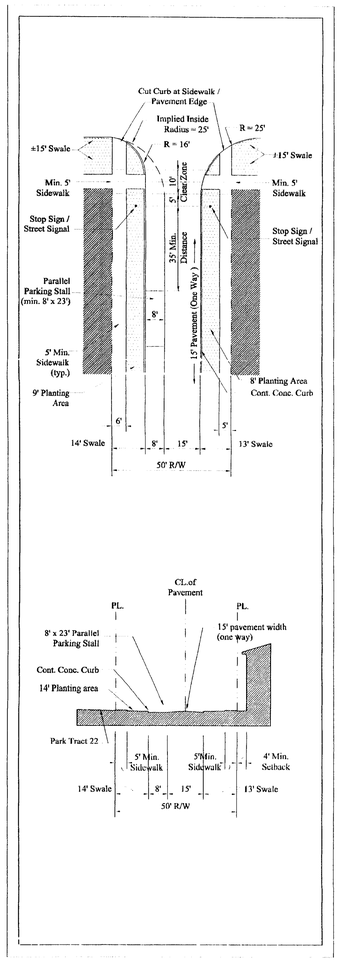

T = 56'
Minor Road w/
Parallel Parking

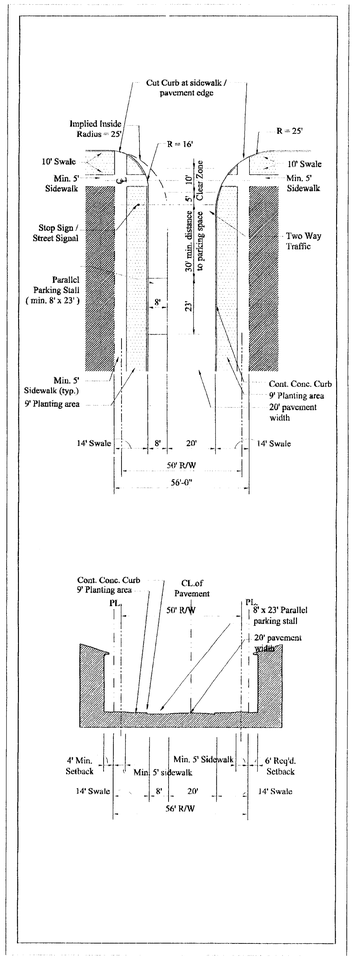

NOTE::
NO TRUCKS ALLOWED IN CARRIAGE LANES

LEGEND

SUBJECT PROPERTY

GRASSED AREAS

0 15 30 45 105 ft.
SCALE: 1" = 30'

JUNE 9, 2004

RECEIVED
AUG 10 2004
ZONING HEARINGS SECTION
MIAMI-DADE PLANNING AND ZONING DEPT.
BY

G.C. HOMES, INCORPORATED
OWNER - DEVELOPER
14425 COUNTRY WALK DRIVE MIAMI, FLORIDA

SUMMERVILLE
GOULDS, MIAMI - DADE COUNTY, FLORIDA

STREET TYPES AND STREET SECTIONS

ROSELLO BALBOA + LORDI
ARCHITECTURE & TOWN PLANNING
13370 SOUTHWEST 131ST STREET SUITE 104 MIAMI, FLORIDA 33186
TELEPHONE: 786.293.2313 FACSMIL E: 786.293.2344 MAIL@RBLARCHITECTURE.COM

T = 62'
Minor Road w/
Parallel Parking

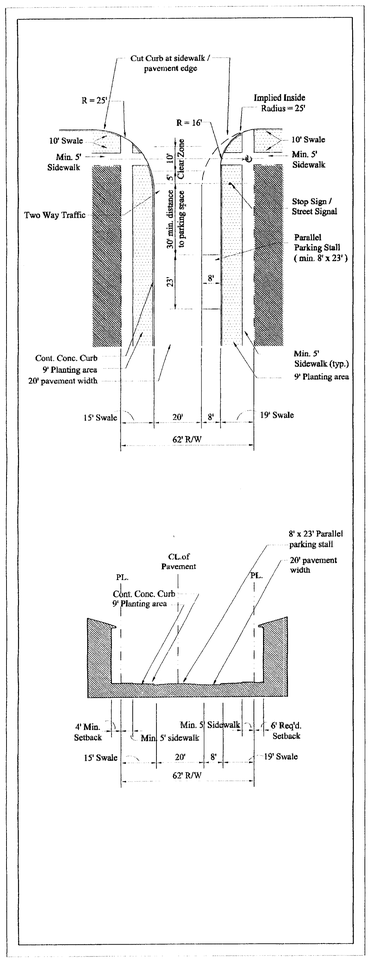

T = 91'
Boulevard

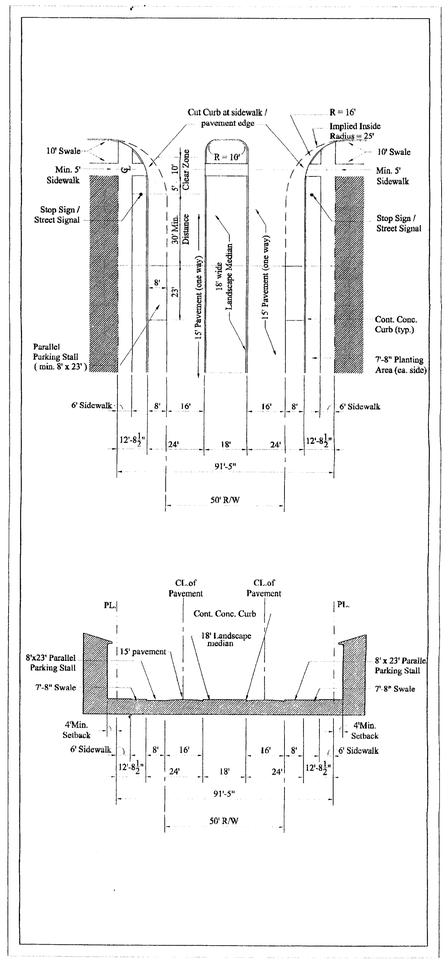

T = 80'
Zoned R.O.W.
(Existing Condition Shown)

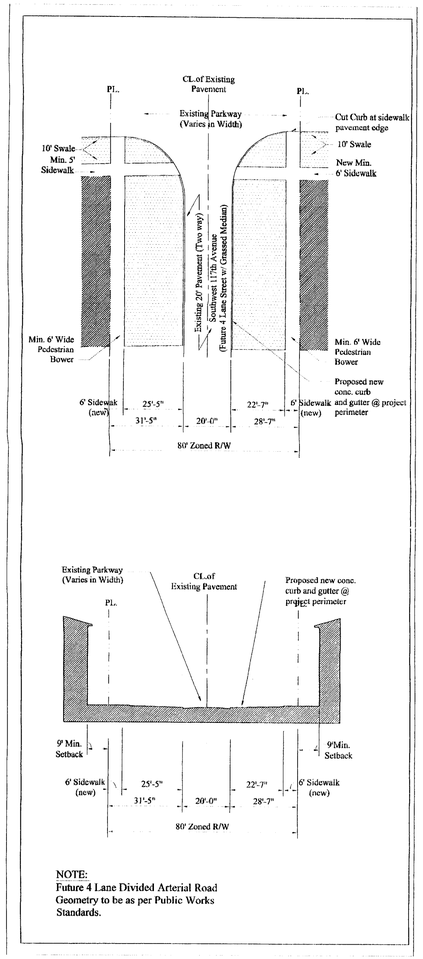

NOTE:
Future 4 Lane Divided Arterial Road Geometry to be as per Public Works Standards.

T = 106' / 112'
Main Street

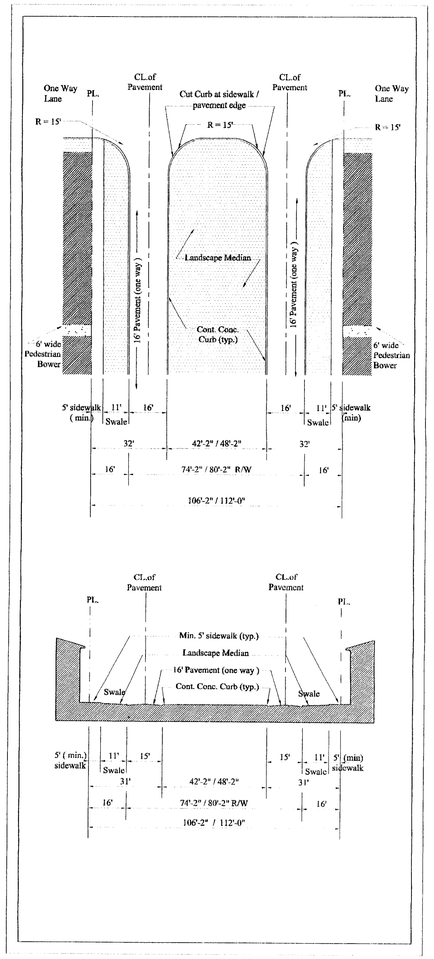

NOTE:
NO TRUCKS ALLOWED IN CARRIAGE LANES

LEGEND

SUBJECT PROPERTY

GRASSED AREAS

0 15 30 45 105 ft.
SCALE: 1" = 30'

JUNE 9, 2004

Rev #1
RECEIVED
04-15
AUG 10 2004
ZONING HEARINGS SECTION
MIAMI-DADE PLANNING AND ZONING DEPT.
BY